Welcome to Bluebonnet Electric Cooperative

Bluebonnet Electric Cooperative Inc. was incorporated in 1939 as the Lower Colorado River Electric Cooperative. The name of the Cooperative was changed to Bluebonnet Electric Cooperative, Inc. in 1964, to enhance a separate identity from the Lower Colorado River Authority (LCRA).

Bluebonnet serves all or part of 14 counties, covers over 3,800 square miles and serves more than 120,000 meters. Bluebonnet operates five retail centers: Bastrop, Brenham, Lockhart, Giddings and Manor. Bluebonnet is one of the largest electric cooperatives in Texas. A distribution cooperative, Bluebonnet purchases most of its power wholesale from the LCRA. Bluebonnet operates and maintains approximately 12,000 miles of distribution lines. Bluebonnet owns 26 substations and purchases power at 22 additional substations owned by the LCRA.

Bluebonnet provides this packet to all developers and their agents and it should be used as a guide in planning the installation of electrical equipment for receiving electrical power from the distribution system of Bluebonnet.

The information presented is subject to change and will be revised periodically to reflect any changes which may develop. Please refer to our website at bluebonnet.coop for any additional information as well as an online source of this packet.

Thank you. We look forward to working with you as your electrical provider.

Bluebonnet Project Coordination Staff

Bluebonnet Electric Cooperative, Inc.
Detailed Commercial Load Data

Bluebonnet Electric Cooperative, Inc.
Attn: Engineering Department
3198 E. Austin Street
Giddings, TX 78942
Phone: (800) 842-7708

BBEC Internal Usage Only

Customer # _____ W.O. # _____

Email Address: _____

Applicant Name: _____ Phone No: _____

Service Address: _____ Date: _____

REQUESTED ELECTRICAL SERVICE **Service/Project Name:**_____

PRIMARY SERVICE

☐ Overhead

☐ Underground

SECONDARY SERVICE

☐ Overhead

☐ Underground

REQUESTED VOLTAGE

☐ 120/240 - 1ø 3 Wire

☐ 240/480 - 1ø 3 Wire

- Single-phase transformers are limited to (1) 100 kVA transformer per overhead service & (1) 167 kVA pad mount transformer per underground service.

☐ 208/120 - 3ø 4 Wire Wye

☐ 480/277 - 3ø 4 Wire Wye

☐ 240/120 - 3ø 4 WIRE DELTA (O/H banks only)

☐ 480 - 3ø 3 WIRE DELTA (O/H Banks Only Corner Grounded)

- Three-phase transformers are limited to (3) 100 kVA transformer per overhead service

☐ Primary Voltage 12.47/7.2kV or 24.9/14.4kV

MAIN DISCONNECT (AMPERES) New _____ Existing (If Any) _____

Total connected load in Amps (Should Match Page 2 Total). _____

SECONDARY SERVICE ENTRANCE CONDUCTORS

☐ **Copper Wire** ☐ **Aluminum Wire**

Wire Size _____ Quantity_____ per phase Quantity _____ for the neutral

- Each Phase MUST be sized to accommodate the TOTAL DISCONNECT SIZE or FUSE/BREAKER installed.
- Commercial service MUST pull in a full size neutral whether it will be used or not.

SECONDARY SERVICE ENTRANCE CONDUIT

Size of Conduit _____ in. Quantity of Conduit _____

Building Size: _____SQ.FT.

Hours of operation: _____ **Days of the week:** _____

Motors (Other Than Air Conditioning)

- Motors or motor loads totaling more than 25 HP, may require soft starters or VFD's(Variable Frequency Drives) and/or 3 Phase Service. VFD's will require appropriate filtering. Please Contact Bluebonnet Electric's Engineering Department for further information.

1ø ☐ 3ø ☐ _____ HP _____ Quantity _____ (Amps)

1ø ☐ 3ø ☐ _____ HP _____ Quantity _____ (Amps)

1ø ☐ 3ø ☐ _____ HP _____ Quantity _____ (Amps)

1ø ☐ 3ø ☐ _____ HP _____ Quantity _____ (Amps)

1ø ☐ 3ø ☐ _____ HP _____ Quantity _____ (Amps)

Total Motor _____ **HP** _____ **(Amps)**

Total Load on System

Heating Load	_____	(Amps)	_____	(kW)
A/C Load	_____	(Amps)	_____	(kW)
Lighting Load	_____	(Amps)	_____	(kW)
Motor Load	_____	(Amps)	_____	(kW)
Other Load	_____	(Amps)	_____	(kW)
Total Load	_____	**(Amps)**	_____	**(kW)**

LICENSED ELECTRICIAN/ENGINEER SIGNATURE: _____

PRINT NAME: _____ LICENSE # _____

DATE: _____ PHONE # _____

Developer's Checklist

Responsibility of Developer:

- ☐ Developer must fill out a Development Information Request Form and submit to Bluebonnet along with design fee if required.
- ☐ Developer is responsible for confirming all Bluebonnet easement requirements with Bluebonnet prior to platting.
- ☐ Developer must have an engineering firm submit preliminary plan of development in digital (AutoCAD) format to Bluebonnet Engineering Department. These plans must include streets, wet utilities, and grading plans as well as any other utilities planned for said development. BBEC will not accept removable media devices for file submissions. For files that are too large to send via email, a BBEC FTP Site will be provided.
- ☐ A design/re-design fee of $50/hr. could be required either prior to or following the design process. This decision will be made at the discretion of Bluebonnet on a case by case basis. These fees are non-refundable and are subject to revision at Bluebonnet's discretion.
- ☐ Prior to Bluebonnet construction, two (2) hard copies of the approved plat must be submitted.
- ☐ Developer must provide and install all underground conduits at road crossings in the designated locations per Bluebonnet Crossing Plans, and if applicable, all electrical conduits in designated locations per Bluebonnet Construction Plans. See Bluebonnet Specifications. **If project design includes overhead primary lines and transformers in conjunction with underground meter pedestals, Developer may install road crossings ONLY. Bluebonnet contractors shall complete installation from road crossings to point of termination and this labor and material will be figured into the respective Contribution In Aid of Construction (CIAC).**
- ☐ Developer is responsible for following Bluebonnet inspection policies and procedures prior to and during conduit installation if using his own contractor (see Page 8).
- ☐ Property pins must be set and clearly visible at all property corners, at developer's expense, prior to Bluebonnet commencing construction.
- ☐ Developer is responsible for submitting contribution-in-aid of construction (CIAC) to cover Bluebonnet's construction costs prior to Bluebonnet commencing construction. Bluebonnet department will contact developer to communicate planned construction start date and duration following project being released for scheduling.
- ☐ Developer is responsible for all right-of-way clearing and grubbing to Bluebonnet specifications. Bluebonnet will clear the right-of-way for proposed overhead facilities for an additional charge. See Bluebonnet Specifications.
- ☐ Developer is responsible for ensuring conduit contractor and/or subcontractor adherence to all Bluebonnet Construction Specifications at all times.
- ☐ Developer is to provide ALL materials necessary for the conduit system he installs for his Bluebonnet Underground System. Bluebonnet will own these materials after proper installation is certified by a Bluebonnet Inspector.

Developer's Fees and Information

Development Fees

1. A design/re-design fee of $50/hr. could be required either prior to or following the design process. This decision will be made at the discretion of Bluebonnet on a case by case basis. These fees are non-refundable and are subject to revision at Bluebonnet's discretion.

2. Every request for design and every alteration to all initial requests for design services may be considered as an individual request and, therefore are subject to additional fees to be determined by Bluebonnet.

3. When the developer or prospective developer enters into a line extension agreement with Bluebonnet for service, monies received for engineering design estimates of service will be applied to the cost of construction. Bluebonnet's Line Extension Policy can be found in the enclosed Member Handbook or on the "Residential Development" link on our website at www.bluebonnetelectric.coop

4. If the developer or prospective developer does not notify Bluebonnet within a 180 day period of initial design with the intent to proceed, then any design fees paid to date will be forfeited and the prospective project will be treated as new.

5. A maintenance fee of $1 per linear foot of trench will be required at the time of contribution by the developer to cover the cost of any necessary repairs in the first year following the completion of Bluebonnet facilities installation.

Additional Notes

Underground electrical lines in residential developments (including apartment complexes and any commercial service) shall be looped to accommodate the ability to feed from two or more directions so that in the event of an outage the most number of customers can be provided power until the failed line or equipment is restored. Avoid looping back in the same ditch. Never loop back to the same riser pole, sectionalizing cabinet, or switchgear.

Where three-phase is used to provide single-phase service to individual occupants, the load must be balanced between all three phases as equally as possible. This applies whether the single phase services are individually metered or not.

Fire Pumps

Electric service to fire pumps shall be served through a CT-metered service.

Easements / Right-of-Way

1. Bluebonnet shall be granted, at no cost and in writing suitable for recording, all rights-of-way and easements necessary to serve member, overhead or underground for the erection, maintenance, repair, replacement, removal or use of all wires, poles, machinery, fixtures, or equipment needed to supply and deliver electric service to the member.

2. A signed easement granted to Bluebonnet will be required before construction will commence. Once Bluebonnet facilities are installed, the easement will adhere to the facilities, from the installation point with a 15 foot easement on each side of the centerline (30 feet of easement) of overhead facilities and 20 foot easement (10 feet on each side of the centerline), for underground facilities.

3. Only Bluebonnet equipment or material is allowed to be attached to Bluebonnet property, except where said equipment and/or materials is required to provide electrical service and said equipment and/or material has been authorized by Bluebonnet.

4. Please note that Bluebonnet facilities must be installed in easements that are exclusive to Bluebonnet with no other utilities being allowed in these easements except for buried crossings.

Location of Facilities

All overhead or underground distribution lines and equipment will be located in an area that is easily accessible by Bluebonnet vehicles and personnel.

To prioritize safety for first responders and Bluebonnet Electric Cooperative, Inc.'s (BBEC) service men, the main electrical disconnect for each electrical service shall be installed in a readily accessible outdoor location no more than 100 feet from the transformation site. BBEC's Engineering Department must approve the electrical disconnect location before a design estimate will be provided.

Developer Installed Conduit Guidelines and Procedures

1. Developer will review Bluebonnet's construction specifications prior to trenching and conduit installation (specifications included in this document). Developer is encouraged to contact Bluebonnet inspector listed in #3 below with any questions.

2. Developer must provide and install all underground material in the designated locations per Bluebonnet's design. Bluebonnet will provide and install the associated hardware such as sectionalizers and transformers that will be located above ground.

3. Developer will contact the Bluebonnet Project Coordinator when conduit and stub-ups are installed prior to filling the ditch (open ditch inspection). Bluebonnet will respond within 48 hours of notification. Please choose from the list of Bluebonnet Project Coordinators to schedule an inspection.

   - **Project Coordinator Rodney Gerik, may be reached at (979) 540-8814 (cell), or at rodney.gerik@bluebonnet.coop.**
   - **Project Coordinator Shawn Ely, may be reached at (979) 540-7361 (cell), or at shawn.ely@bluebonnet.coop.**
   - **Project Coordinator Dalton Voight, may be reached at (512) 629-3771 (cell), or at dalton.voight@bluebonnet.coop**
   - **Project Coordinator Shane Mathison, may be reached at (979) 542-8540, or at shane.mathison@bluebonnet.coop.**
   - **Project Coordinator Jorge Varillas, may be reached at (512) 764-2838, or at Jorge.Varillas@bluebonnet.coop.**
   - **Project Coordinator Scott Iselt, may be reached at (979) 542-8522, or at Scott.Iselt@bluebonnet.coop.**
   - **Project Coordinator Wyatt Rosenauer, may be reached at (512) 332-8665, or at Wyatt.Rosenauer@bluebonnet.coop.**

4. Trenches will remain open until inspected and approved by the Bluebonnet inspector. Upon inspection, developer will be advised as to what may or may not be backfilled.

5. Bluebonnet retains the right to terminate any conduit installation if inspection reveals non-compliance with Bluebonnet inspection policies, procedures, or specifications until said issues are resolved and approved through re-inspection.

5. Equipment location and conduit stubs must meet clearance requirements on all sides as outlined in Bluebonnet Specifications.

6. Developer or his/her contractor is responsible for acquiring any and all permits and remitting any necessary fees for trench and conduit installation (excavation plans, traffic control plans, digging permits, etc.)

Developer's Checklist

Responsibility of Developer:

- ☐ Developer is responsible for confirming all easement requirements with Bluebonnet prior to installation.
- ☐ Developer is responsible for following Bluebonnet's inspection policies and procedures prior to and during conduit installation.
- ☐ Developer is responsible for all right-of-way clearing or grubbing to Bluebonnet's specifications.
- ☐ Developer is responsible for adherence to all Bluebonnet's Construction Specifications.

Developer's Fees and Information

1. Every request for alteration to initial requests for design services are subject to additional fees to be determined by Bluebonnet.
2. Bluebonnet's Line Extension Policy can be found in the Member Handbook.
3. A maintenance fee of $1 per linear foot of trench will be required at the time of contribution by the member to cover the cost of any necessary repairs in the first year following the completion of Bluebonnet's underground facilities installation.
4. Cost estimate given to developer will be good for **60** days.

MEMBER RESPONSIBILITY		BLUEBONNET RESPONSIBILITY
Deliver essential project documents to Bluebonnet Electric Coop. **- Site plan files (CAD Format), load information, information request form(s), project schedule.**	**BEFORE THE CLOCK STARTS**	Facilitate correspondence with member/developer to discuss needs and review available information.
		Provide Bluebonnet Developer's Package (Commercial/ Residential); including standard Bluebonnet Easement.
		Collect information from Member/Developer.
		Verify a complete member package has been received, including all required documentation.
Host a site visit and/or Pre-design Meeting/Call with Bluebonnet Representative(s). **Provide up to date and accurate Project Schedule for all stages, including desired energization date.**	**WEEK #1**	Attend site visit or Pre-design meeting, evaluate site layout, utility coordination, member construction coordination, jobsite construction access, etc.
****Bluebonnet Electric cannot begin design of project until all required documentation is received.****	**WEEKS #2-#5**	Design electric service layout; coordinate with the electric system (circuit capacity, fuses). Size equipment, determine rate class for Community Representative to communicate to Member.
	WEEKS #6-#7	Prepare and submit any necessary permits. Schedule and complete field staking of project. Finalize and secure all easements.
	WEEK #8	Create cost estimate and deposit and send cost letter and Site Ready Letter to developer.
Expedite payment to Bluebonnet Electric for project. **Provide any required third party easements and outstanding information.**	**WEEK #9**	
****Bluebonnet Electric will not release project for scheduling (apartments and subdivisions) until addressing information is received.****	**WEEKS #10-#11**	Process project payment.
	WEEK #12	Prepare for and release project to construction. Verify material availability and receipt of developer's Site Ready Letter.
****Bluebonnet Electric cannot begin construction of project until Site Ready documentation is received.****	**WEEKS #13-#28**	Upon release, Construction Lead (Contract Coordinator or Bluebonnet Construction) will contact member within two business days to provide anticipated construction start date, duration, planned completion, etc.
Construction crews will leave the site if suitable construction conditions are unsatisfactory.		
Member completes preparation for final electric service delivery.		Request crew scheduling from construction. Complete inspections and accept installations. Verify site is prepared and ready for construction.
		Construct Bluebonnet Electric Facilities.
Member requests initiation of final electric service.	**WEEKS #29-#30**	Inspect final installation. Energize project and initiate electric service.

A. If a Member step is late, the project clock **STOPS**. Members/Developers are highly encouraged to stay on top of payments, required easements, and all crucial deliverables and documentation.
B. Elapsed times are not a guarantee. More than thirty weeks may be needed for larger scope projects or projects that require significant upgrades to Bluebonnet Electric's system infrastructure.
C. Member/Developer is required to provide Bluebonnet Electric with any and all required easements, including third party, prior to commencing construction.
D. Bluebonnet Engineering staff are responsible for all steps from project inception through Week #12. Weeks #13 - #30 are managed by Bluebonnet Construction Staff and are denoted in **BLUE**.
E. Permitting schedule is contingent on regulatory agency approval (response times vary).
F. Member/Developer is required to notify construction once site is ready by returning a signed Site Ready Letter. **Projects will not be released for scheduling until this document has been returned.**

During the **planning, engineering, and design phase** of your project your main point of contact will be one of Bluebonnet's Project Coordinators. If the Project Coordinator for your project is not available, one of the other team members will be glad to assist you.

Shawn Ely
shawn.ely@bluebonnet.coop
Office: (979) 542-8518
Cell: (979) 540-7361

Rodney Gerik
rodney.gerik@bluebonnet.coop
Office: (979) 542-8527
Cell: (979) 540-8814

Clemente Verastegui
clemente.verastegui@bluebonnet.coop
Office: (979) 542-8542
Cell: (512) 578-6393

Scott Iselt
scott.iselt@bluebonnet.coop
Office: (979) 542-8522
Cell: (979) 540-0195

Shane Mathison
shane.mathison@bluebonnet.coop
Office: (979) 542-8540
Cell: (512) 577-6817

Thomas Ellis (Manager)
thomas.ellis@bluebonnet.coop
Office: (979) 542-8545
Cell: (979) 540-6146

Dalton Voight
dalton.voight@bluebonnet.coop
Cell: (512) 629-3771

Jorge Varillas
jorge.varillas@bluebonnet.coop
Office: (512) 764-2838
Cell: (512) 376-8291

Wyatt Rosenauer
wyatt.rosenauer@bluebonnet.coop
Office: (979) 542-8665
Cell: (512) 629-5924

During the **construction, inspection, and metering phase** of your project your main point of contact will be Bluebonnet's Contractor Coordinator OR Assistant Superintendent. Bluebonnet's personnel cover specific areas of the service territory; areas are listed with their contact information.

Joey Tobola (Contractors)
joey.tobola@bluebonnet.coop
Cell: (979) 540-7162

Randall Bownds (Giddings Area)
randall.bownds@bluebonnet.coop
Office: (979) 542-8516
Cell: (979) 540-6418

Chad Lewis (Brenham Area)
chad.lewis@bluebonnet.coop
Office: (979) 277-8558
Cell: (979) 277-4041

Aaron Seeliger (Red Rock Area)
aaron.seeliger@bluebonnet.coop
Office: (512) 764-2788
Cell: (512) 227-2281

Kenneth Roush (Underground – All Areas)
kenneth.roush@bluebonnet.coop
Cell: (512) 468-5088

Tim Mittasch (Underground- All Areas)
tim.mittasch@bluebonnet.coop
Cell: (979) 540-7159

Daniel Fritsche (Bastrop Area)
daniel.fritsche@bluebonnet.coop
Office: (979) 542-8514
Cell: (979) 542-8546

Carl Miller (Underground Inspector)
carl.miller@bluebonnet.coop
Cell: (979) 540-6495

Joe Hernandez (Underground Inspector)
jose.hernandez@bluebonnet.coop
Cell: (720) 670-7299

Jose Villarreal (Underground Inspector)
jose.villarreal@bluebonnet.coop
Cell: (512) 988-1885

Martin Dorantes (Underground Inspector)
martin.dorantes@bluebonnet.coop
Cell: (512) 748-4453

Material Standards:

Underground warning tape must be 6” width, RED in color with BLACK lettering, and read “Caution Buried Electric Underground”. *Normally, this material is only sold in 1000’ rolls.*

DITCH AND CONDUIT PLACEMENT
NON-ROAD CROSSING

DITCH ASSIGNMENT
FRONT VIEW

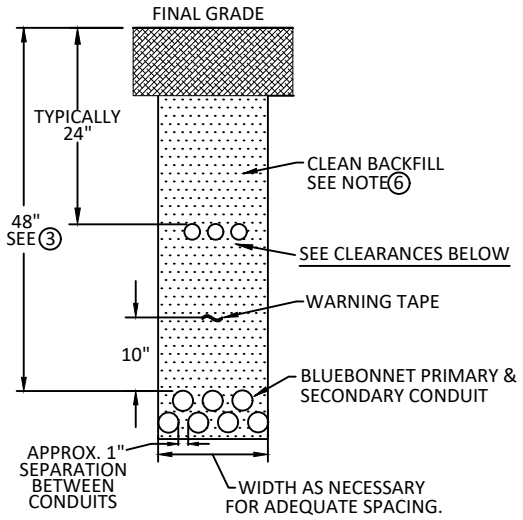

CONDUIT STUB-UP
SIDE VIEW

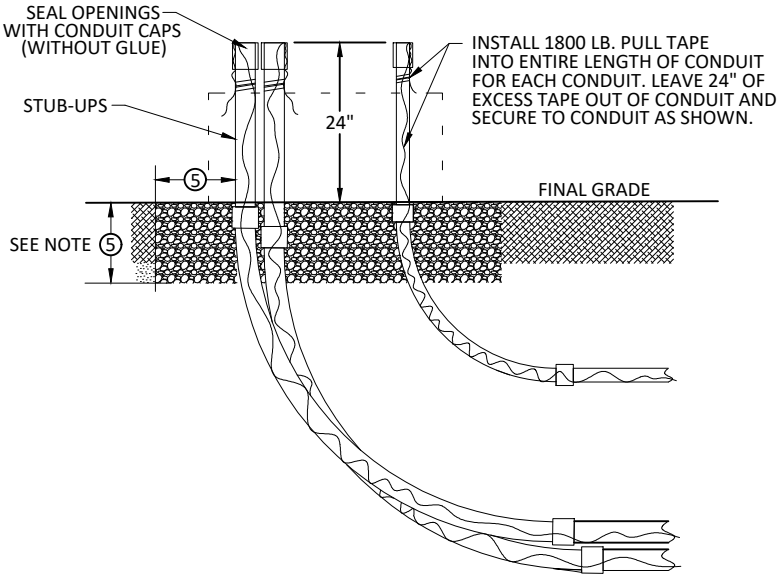

CONDUIT CLEARANCES
FRONT VIEW

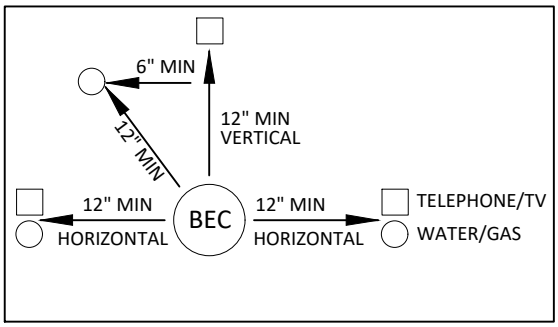

CONDUIT STUB-UP CLEARANCES
TOP VIEW

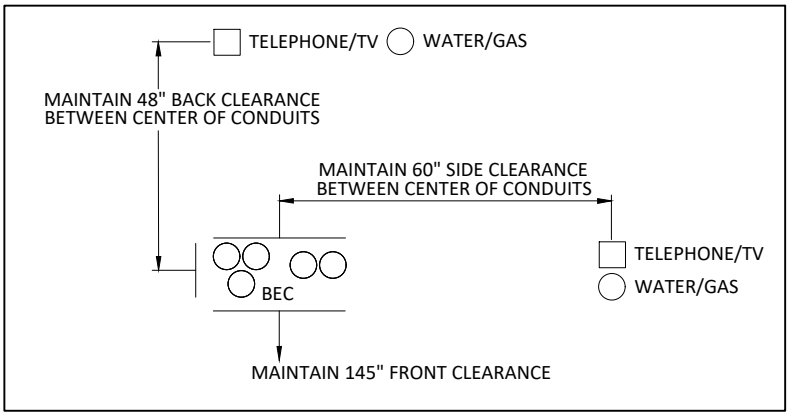

ANY CONDUITS STUBBED OUT FOR FUTURE USE SHALL EXTEND A MINIMUM OF 5' FROM EQUIPMENT. ENDS SHALL BE MARKED WITH 3" DIAMETER GREY PVC CONDUIT, EXTENDING 4' ABOVE GRADE AND PAINTED RED.

NOTES:

1. CONDUIT SHALL BE GREY SCHEDULE 40 PVC. | PRIMARY & SECONDARY= 3" | LIGHTING= 2"
2. CONDUIT ELBOW: PRIMARY & SECONDARY= 90°, 48" SWEEP | STREETLIGHT = 90°, 24" SWEEP
3. NORMAL DITCH COVER DEPTH IS 48". ADJUSTMENTS MAY BE MADE TO 48" DEPTH IF NECESSARY UPON BLUEBONNET APPROVAL.
4. SEPARATION FROM OTHER UTILITIES SHALL BE 12" MINIMUM OR SUFFICIENT TO PREVENT ANY FORESEEN DAMAGE OF EITHER FACILITY TO THE OTHER.
5. GRAVEL FOR PADS SHALL BE 3/8" WASHED PEA GRAVEL. DEPTH AND WIDTH SHALL BE TO EQUIPMENT SPECIFICATION.
6. BACKFILL MATERIAL SHALL BE CLEAN AND FREE FROM ALL ORGANIC MATERIAL, UNSTABLE MATERIALS, DEBRIS, LUMPS, OR BROKEN PAVING. NO ROCKS OR STONES SHALL BE GREATER THAN 1" IN ANY BACKFILL. THE BACKFILL MUST PROVIDE AN EVEN SUPPORT FOR CONDUITS. MATERIAL FOR BACKFILL MAY BE MATERIAL RESULTING FROM EXCAVATION, IF SUITABLE IN THE OPINION OF THE BBEC INSPECTOR OR BBEC PROJECT COORDINATOR.

Bluebonnet	Drawn:	Approved:	Date:	UNDERGROUND DISTRIBUTION	J-3
	CV	Project Coordinators	Oct. 31, 2019		

DITCH AND CONDUIT PLACEMENT
ROAD CROSSING

CONDUIT FRONT VIEW

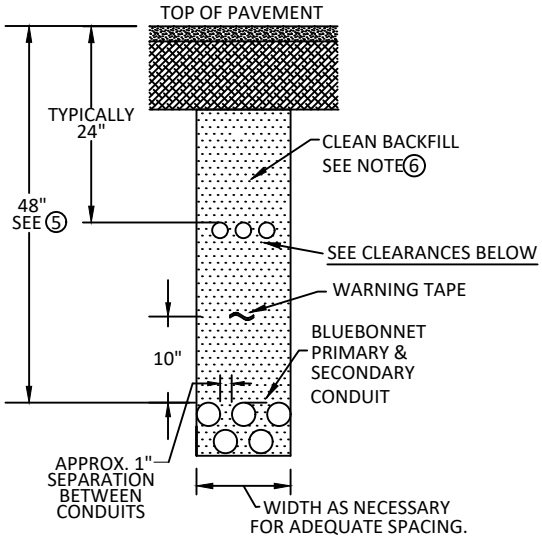

CONDUIT SIDE VIEW

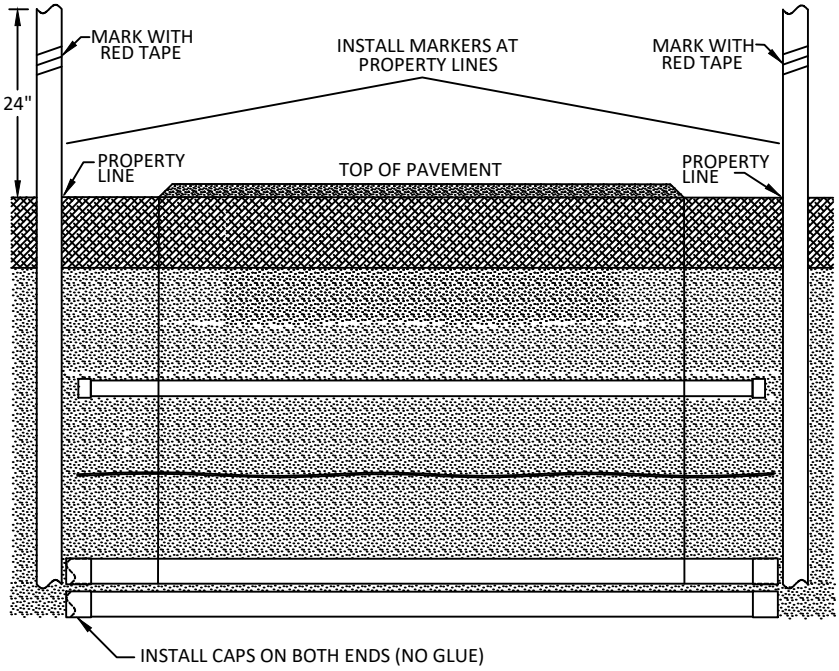

CONDUIT CLEARANCES FRONT VIEW

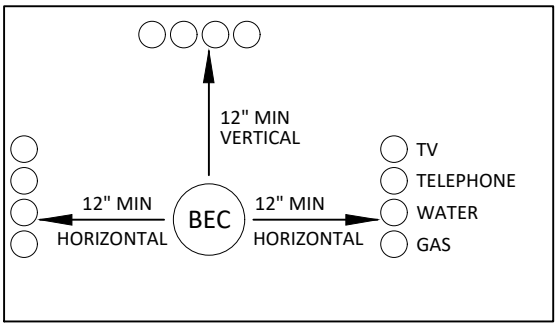

CONDUIT STUB-UP CLEARANCES TOP VIEW

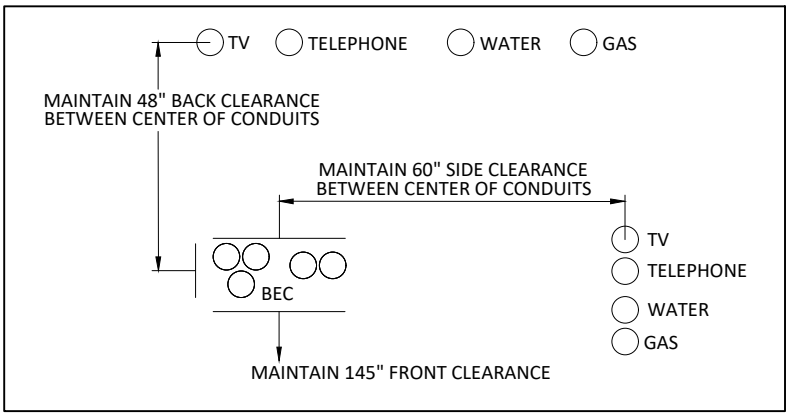

ANY CONDUITS STUBBED OUT FOR FUTURE USE SHALL EXTEND A MINIMUM OF 5' FROM EQUIPMENT. ENDS SHALL BE MARKED WITH 3" DIAMETER GREY PVC CONDUIT, EXTENDING 4' ABOVE GRADE AND PAINTED RED.

NOTES:

1. STATE AND LOCAL CODES MAY REQUIRE DIFFERENT STANDARDS, IN WHICH CASE THE MOST STRINGENT CODE SHALL TAKE PRECEDENCE.
2. CONDUIT SHALL BE MINIMUM GRAY SCHEDULE 40 PVC. | PRIMARY & SECONDARY = 3" | LIGHTING = 2"
3. CONDUIT ELBOW: PRIMARY & SECONDARY = 90°, 48" SWEEP | LIGHTING = 90°, 24" SWEEP
4. LENGTH OF CONDUITS SHALL BE FROM PROPERTY LINE TO PROPERTY LINE.
5. NORMAL COVER DEPTH IS 48". ADJUSTMENTS MAY BE MADE TO 48" DEPTH IF NECESSARY UPON BLUEBONNET APPROVAL.
6. BACKFILL MATERIAL SHALL BE CLEAN AND FREE FROM ALL ORGANIC MATERIAL, UNSTABLE MATERIALS, DEBRIS, LUMPS, OR BROKEN PAVING. NO ROCKS OR STONES SHALL BE GREATER THAN 1" IN ANY BACKFILL. THE BACKFILL MUST PROVIDE AN EVEN SUPPORT FOR CONDUITS. MATERIAL FOR BACKFILL MAY BE MATERIAL RESULTING FROM EXCAVATION, IF SUITABLE IN THE OPINION OF THE BBEC INSPECTOR OR BBEC PROJECT COORDINATOR.

Bluebonnet	Drawn:	Approved:	Date:	UNDERGROUND DISTRIBUTION	J-4
	CV	Project Coordinators	Oct. 31, 2019		

RISER POLE CONDUIT

DITCH ASSIGNMENT
FRONT VIEW

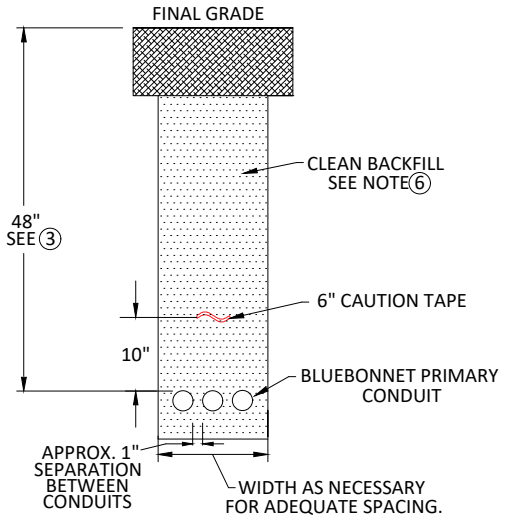

CONDUIT STUB-UP
SIDE VIEW

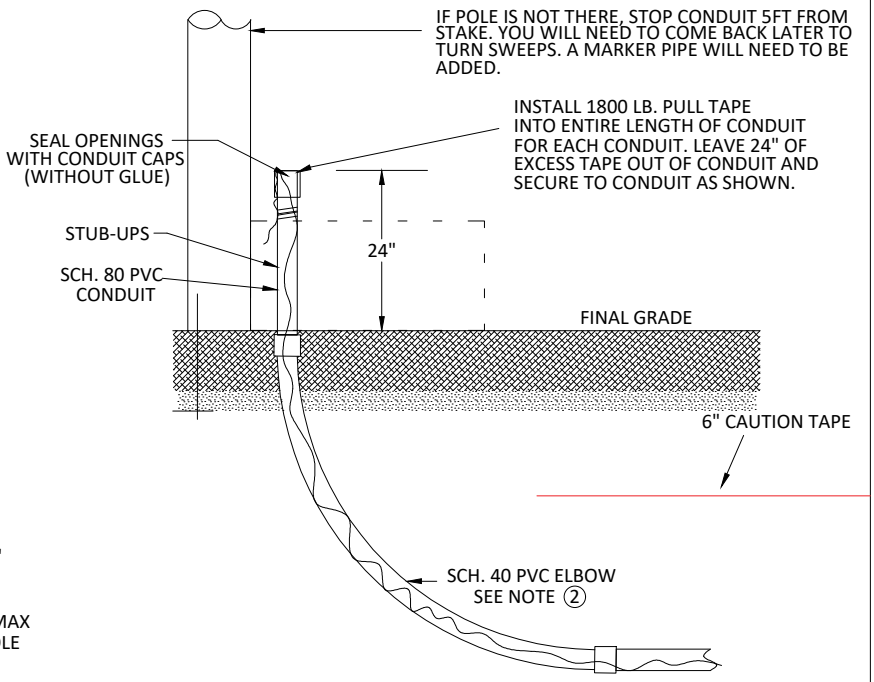

TOP VIEW

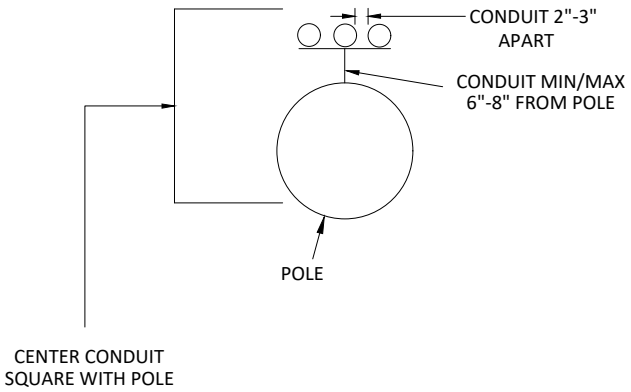

NOTES:

1. CONDUIT BELOW GROUND SHALL BE GREY SCHEDULE 40 PVC. | PRIMARY & SECONDARY= 3" | LIGHTING= 2"
2. CONDUIT ELBOW: PRIMARY & SECONDARY= 90°, 48" SWEEP | STREETLIGHT = 90°, 24" SWEEP
3. NORMAL DITCH COVER DEPTH IS 48". ADJUSTMENTS MAY BE MADE TO 48" DEPTH IF NECESSARY UPON BLUEBONNET APPROVAL.
4. SEPARATION FROM OTHER UTILITIES SHALL BE 12" MINIMUM OR SUFFICIENT TO PREVENT ANY FORESEEN DAMAGE OF EITHER FACILITY TO THE OTHER.
5. BACKFILL MATERIAL SHALL BE CLEAN AND FREE FROM ALL ORGANIC MATERIAL, UNSTABLE MATERIALS, DEBRIS, LUMPS, OR BROKEN PAVING. NO ROCKS OR STONES SHALL BE GREATER THAN 1" IN ANY BACKFILL. THE BACKFILL MUST PROVIDE AN EVEN SUPPORT FOR CONDUITS. MATERIAL FOR BACKFILL MAY BE MATERIAL RESULTING FROM EXCAVATION, IF SUITABLE IN THE OPINION OF THE BBEC INSPECTOR OR BBEC PROJECT COORDINATOR.
6. CONDUIT ABOVE GROUND SHALL BE GREY SCHEDULE 80 PVC.
7. FIRST BRACKET WILL BE INSTALLED 24'' FROM FINAL GRADE.
8. ROTATE CONDUIT TO AVOID CONFLICT WITH COMMUNICATION ATTACHMENTS.

Bluebonnet	Drawn:	Approved:	Date:	UNDERGROUND DISTRIBUTION	J-6
	JW	Standards	Mar. 26, 2024		

1PH PADMOUNT TRANSFORMER
DIMENSIONS AND WIRING

TOP VIEW

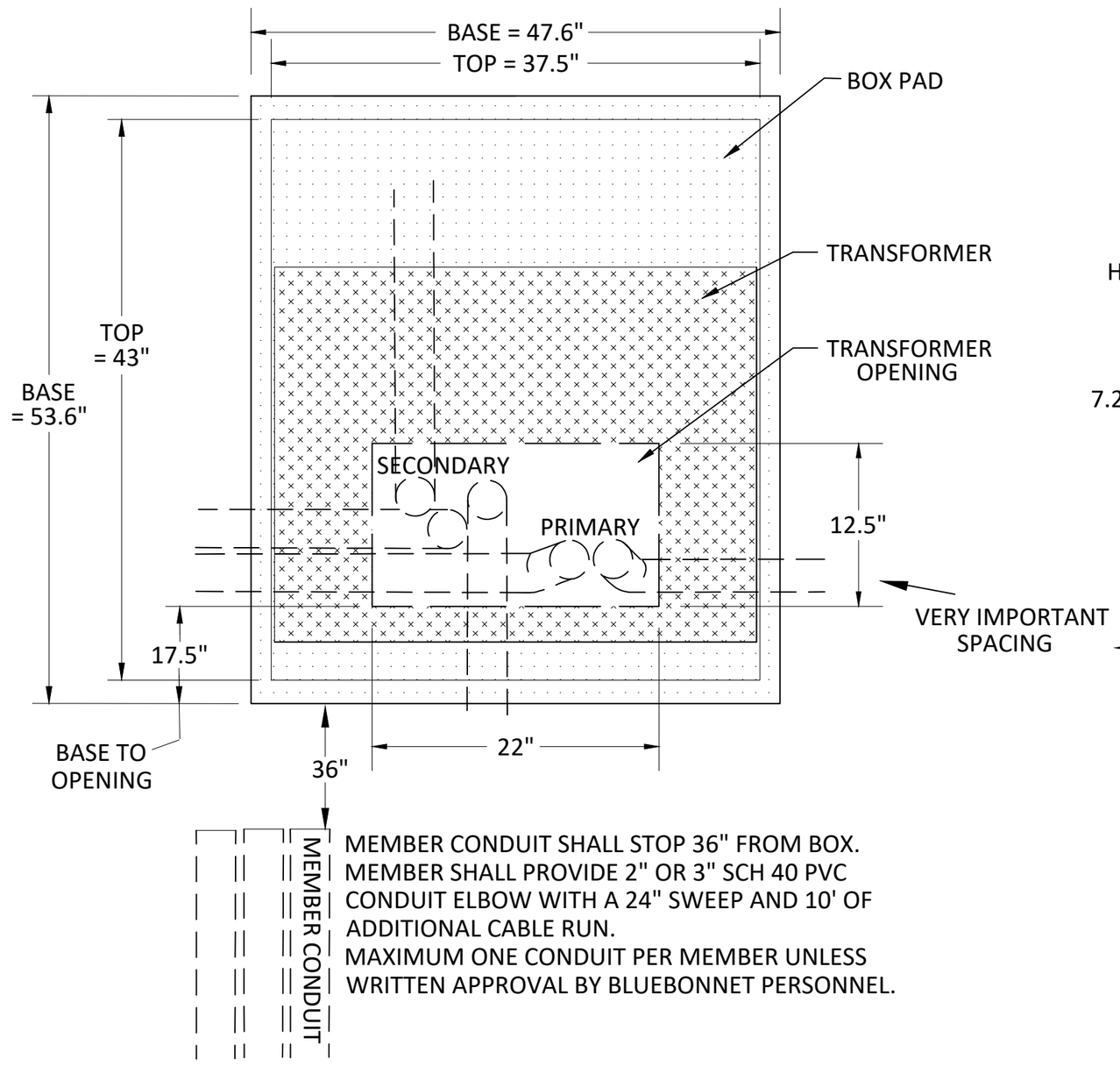

WIRING DIAGRAM

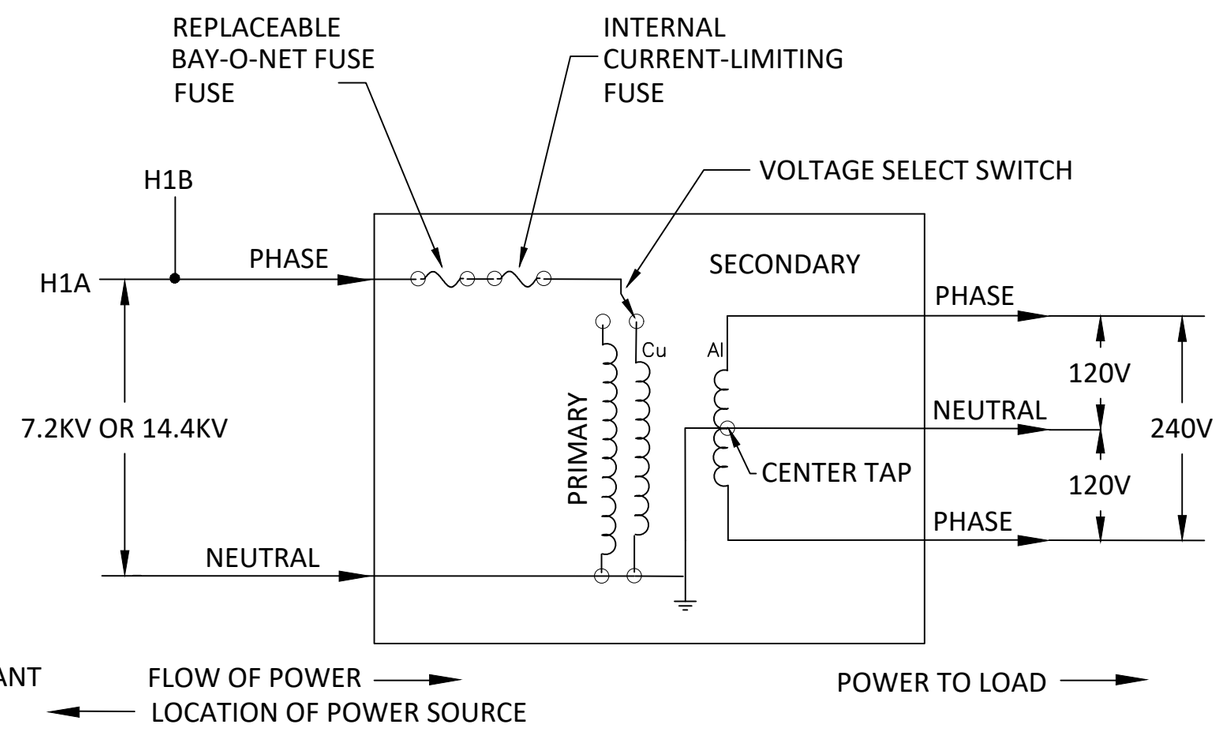

Ⓐ CLEARANCE BETWEEN WALLS AND TRANSFORMER:
NON-COMBUSTIBLE - 3 FT.
COMBUSTIBLE: UP TO 75 kVA - 10 FT.
GREATER THAN 75 kVA - 20 FT.

FRONT VIEW

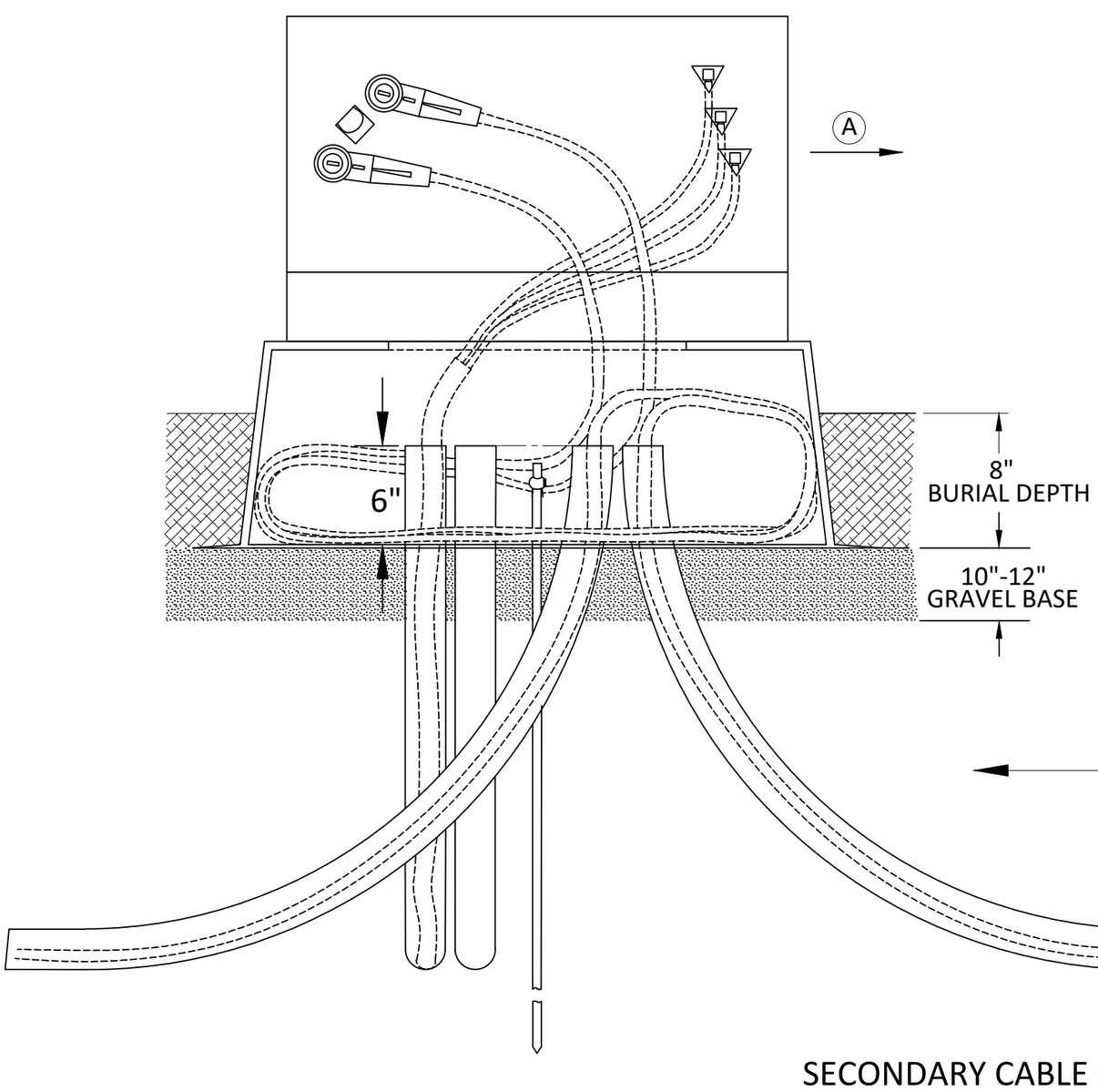

SIDE VIEW

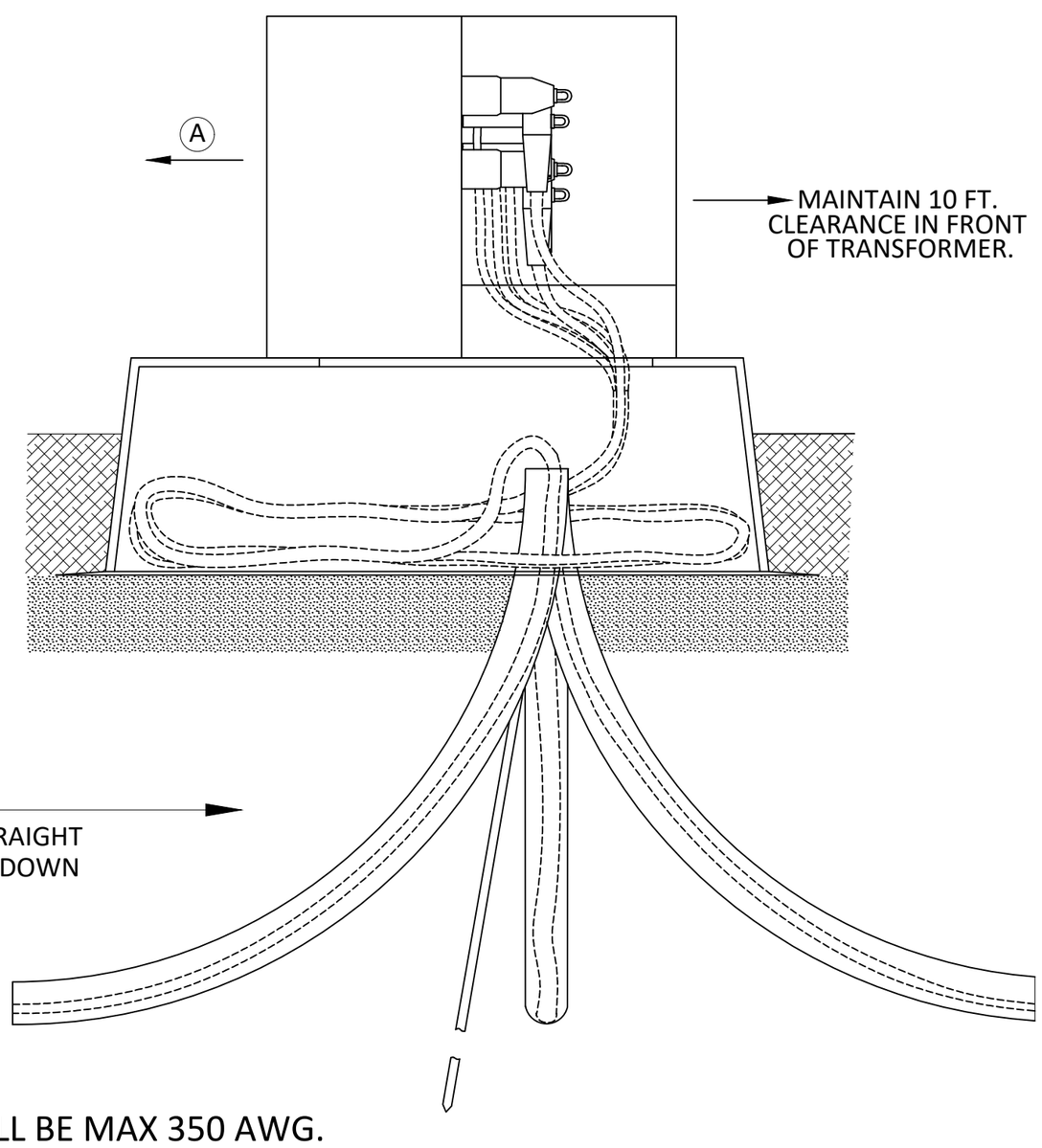

SECONDARY CABLE SIZE SHALL BE MAX 350 AWG.

Bluebonnet	DATE APPROVED: SEPTEMBER 8, 2016	UNDERGROUND DISTRIBUTION	A-2

1PH PADMOUNT SECTIONALIZER
DIMENSIONS AND WIRING

TOP VIEW

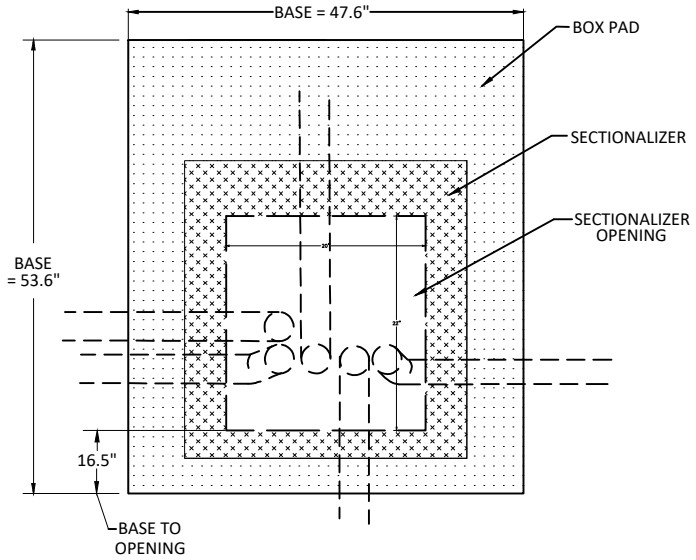

SIDE VIEW

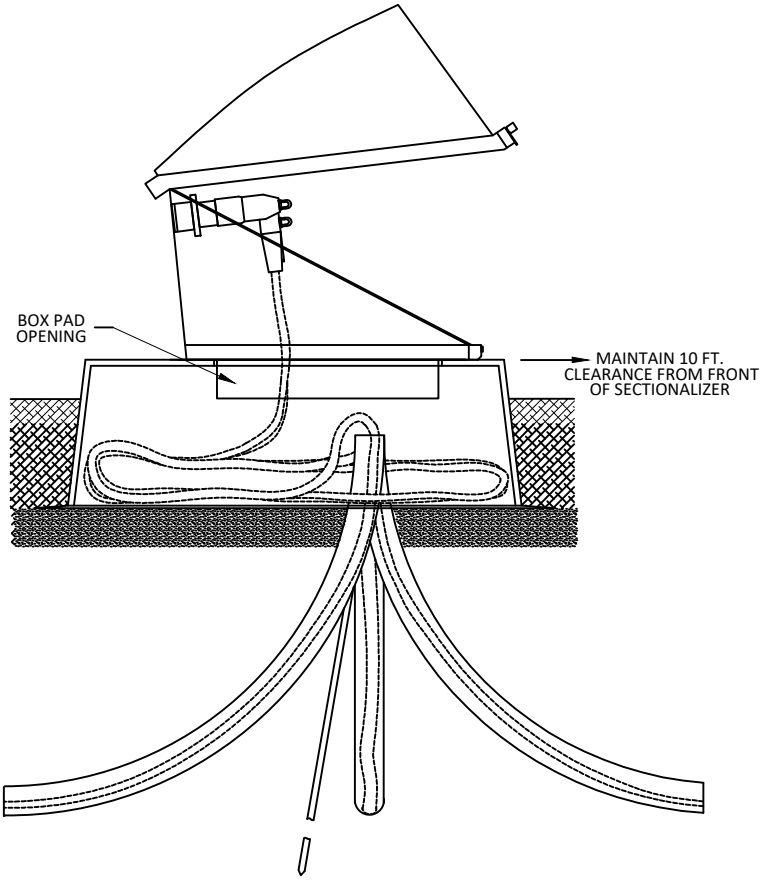

FRONT VIEW

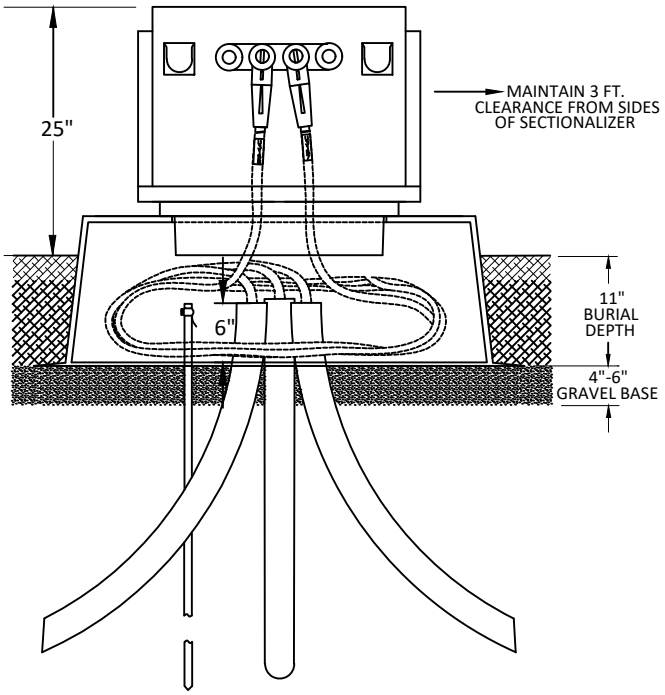

Bluebonnet	DATE APPROVED: SEPTEMBER 8, 2016	UNDERGROUND DISTRIBUTION	C-2

3PH TRANSFORMER PAD
45 - 750 KVA (UM3-A)

TOP VIEW

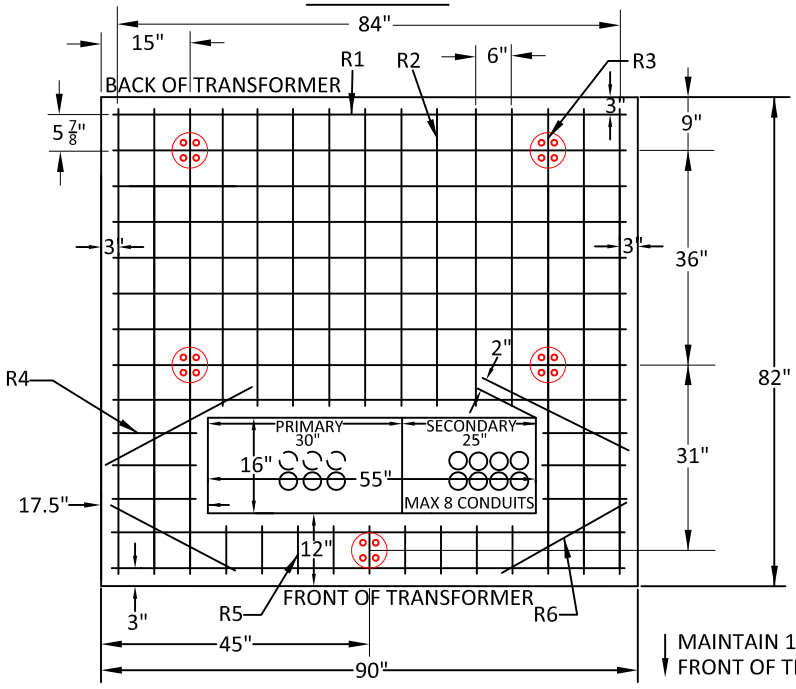

MAINTAIN 10' CLEARANCE IN FRONT OF TRANSFORMER DOORS

MAINTAIN CLEARANCE FROM TRANSFORMER SIDES:
OTHER TRANSFORMERS - 5 FT.
NON-COMBUSTIBLE WALLS - 5 FT.
COMBUSTIBLE WALLS:
0 TO 75 KVA - 10 FT.
>75 KVA - 20 FT.

REINFORCING BARS; 1/2"					
R1	R2	R3	R4	R5	R6
11 X 86"	9 X 50"	6 X 78"	6 X 14"	9 X 8"	4 X 25"

SEE NOTE #3

FRONT VIEW

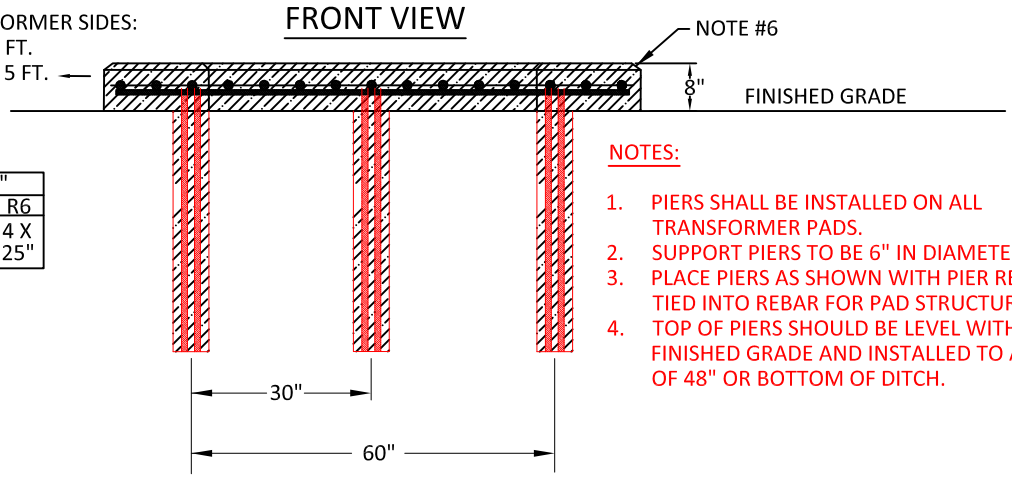

NOTES:

1. PIERS SHALL BE INSTALLED ON ALL TRANSFORMER PADS.
2. SUPPORT PIERS TO BE 6" IN DIAMETER.
3. PLACE PIERS AS SHOWN WITH PIER REBAR TIED INTO REBAR FOR PAD STRUCTURE.
4. TOP OF PIERS SHOULD BE LEVEL WITH FINISHED GRADE AND INSTALLED TO A DEPTH OF 48" OR BOTTOM OF DITCH.

ANY CONDUITS STUBBED OUT FOR FUTURE USE SHALL EXTEND A MINIMUM OF 5' FROM EQUIPMENT. ENDS SHALL BE MARKED WITH 3" DIAMETER GREY PVC CONDUIT, EXTENDING 4' ABOVE GRADE AND PAINTED RED.

NOTES:

1. TAMP GROUND UNDER PAD BEFORE SETTING TO PREVENT UNEVEN SETTLING.
2. CONCRETE: 3000 POUNDS MIN. PER SQUARE INCH; 4% TO 6% ENTRAINED AIR, 3/4" MAX. SIZE AGGREGATE.
3. REINFORCING STEEL: ATSM-A615 GRADE 60; EVENLY SPACE APPROXIMATELY 6" O.C. EACH WAY AND SECURELY TIED TOGETHER.
4. MINIMUM 2 INCH CONCRETE COVER OVER REINFORCING STEEL.
5. WOOD FLOAT LEVEL FINISH LEAVING NO DEPRESSIONS.
6. 3/4" CHAMFER ALL EDGES.
7. PRIMARY AND SECONDARY CONDUIT SHALL BE INSTALLED AND SEALED BEFORE POURING PAD.
8. IF FUTURE EXPANSION TO A TRANSFORMER LARGER THAN 750 KVA IS POSSIBLE, BLUEBONNET MAY REQUEST THE CONSTRUCTION OF THE PAD ON PAGE B-6.
9. **MAXIMUM OF 8 CONDUITS, 4" SCHEDULE 40 PVC PIPES ARE ALLOWED IN THE SECONDARY COMPARTMENT.**
10. STUB THE SECONDARY PIPES AS CLOSE TO THE EDGE SECONDARY CUTOUT AS POSSIBLE. (SEE DRAWING)
11. MAXIMUM OF 6 CONDUITS, 3" SCHEDULE 40 PVC PIPES ARE ALLOWED IN THE PRIMARY COMPARTMENT.

Bluebonnet	Drawn:	Approved:	Date:	UNDERGROUND DISTRIBUTION	B-5
	SF	Coordinators	Nov. 12, 2019		

3PH TRANSFORMER PAD
1000 - 2500 KVA (UM3-B)

TOP VIEW

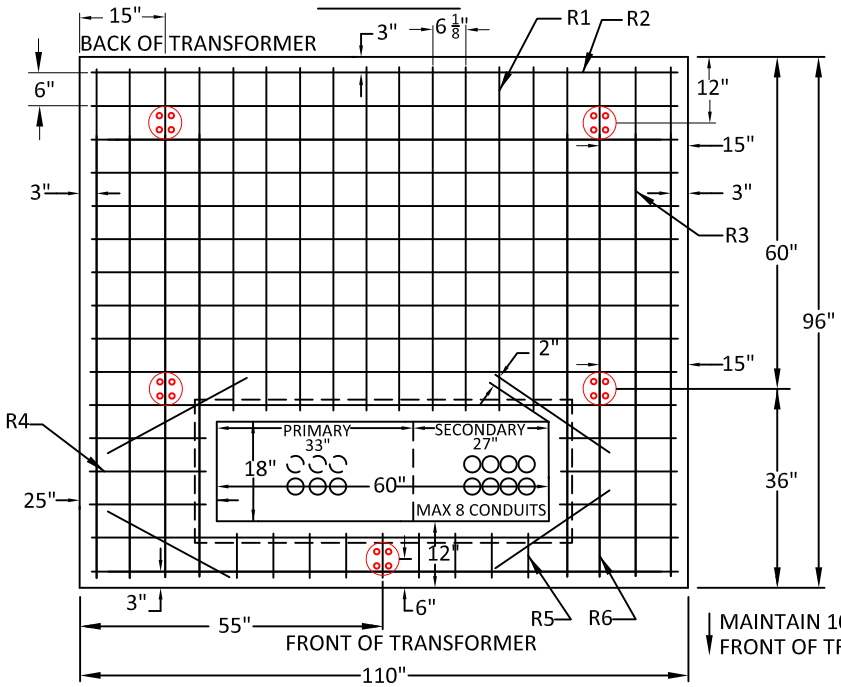

NOTES:

1. PIERS SHALL BE INSTALLED ON ALL TRANSFORMER PADS.
2. SUPPORT PIERS TO BE 6" IN DIAMETER.
3. PLACE PIERS AS SHOWN WITH PIER REBAR TIED INTO REBAR FOR PAD STRUCTURE.
4. TOP OF PIERS SHOULD BE LEVEL WITH FINISHED GRADE AND INSTALLED TO A DEPTH OF 48" OR BOTTOM OF DITCH.

REINFORCING BARS; 1/2"					
R1	R2	R3	R4	R5	R6
10 X 62"	13 X 106"	8 X 92"	6 X 21"	9 X 8"	4 X 25"

SEE NOTE #3

FRONT VIEW

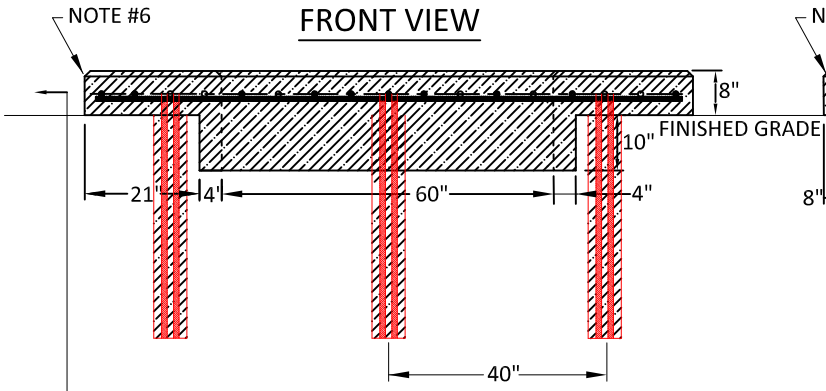

SIDE VIEW

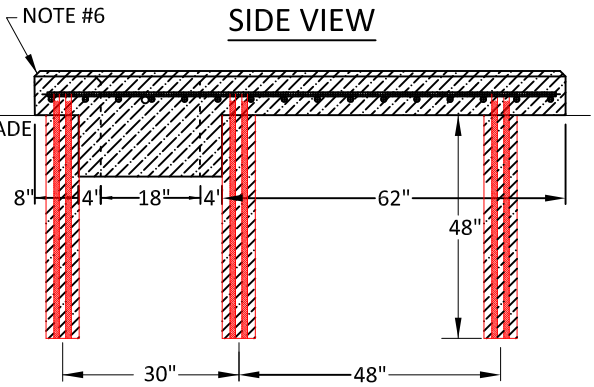

MAINTAIN CLEARANCE FROM TRANSFORMER SIDES:
OTHER TRANSFORMERS - 5 FT.
NON-COMBUSTIBLE WALLS - 5 FT.
COMBUSTIBLE WALLS:
0 TO 75 KVA - 10 FT.
>75 KVA - 20 FT.

NOTES:

1. TAMP GROUND UNDER PAD BEFORE SETTING TO PREVENT UNEVEN SETTLING.
2. CONCRETE: 3000 POUNDS MIN. PER SQUARE INCH; 4% TO 6% ENTRAINED AIR, 3/4" MAX. SIZE AGGREGATE.
3. REINFORCING STEEL: ATSM-A615 GRADE 60; EVENLY SPACE APPROXIMATELY 6" O.C. EACH WAY AND SECURELY TIED TOGETHER.
4. MINIMUM 2 INCH CONCRETE COVER OVER REINFORCING STEEL.
5. WOOD FLOAT LEVEL FINISH LEAVING NO DEPRESSIONS.
6. 3/4" CHAMFER ALL EDGES.
7. PRIMARY AND SECONDARY CONDUIT SHALL BE INSTALLED AND SEALED BEFORE POURING PAD.
8. MAXIMUM OF 8 CONDUITS, 4" SCHEDULE 40 PVC PIPES ARE ALLOWED IN THE SECONDARY COMPARTMENT.
9. STUB THE SECONDARY PIPES AS CLOSE TO THE EDGE SECONDARY CUTOUT AS POSSIBLE. (SEE DRAWING)
10. MAXIMUM OF 6 CONDUITS, 3" SCHEDULE 40 PVC PIPES ARE ALLOWED IN THE PRIMARY COMPARTMENT.

Bluebonnet	Drawn:	Approved:	Date:	UNDERGROUND DISTRIBUTION	B-6
	SF	Coordinators	Nov. 12, 2019		

3PH 600A SECTIONALIZER - DIMENSIONS

TOP VIEW

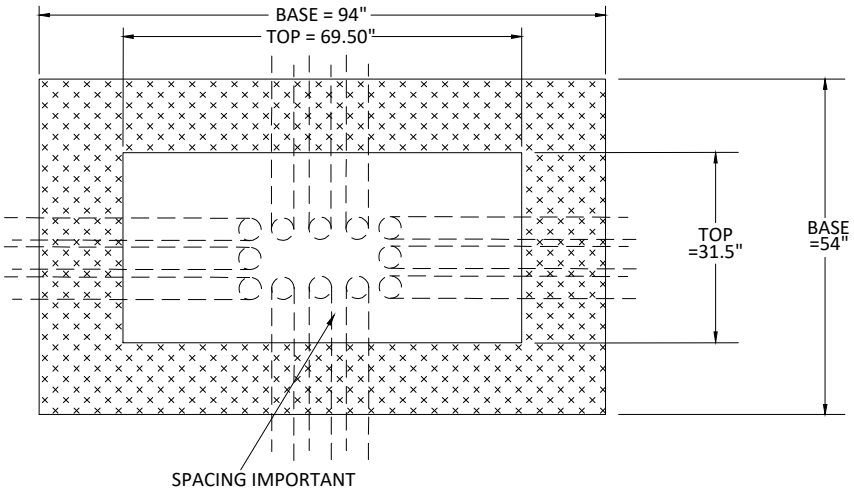

FRONT VIEW

SIDE VIEW

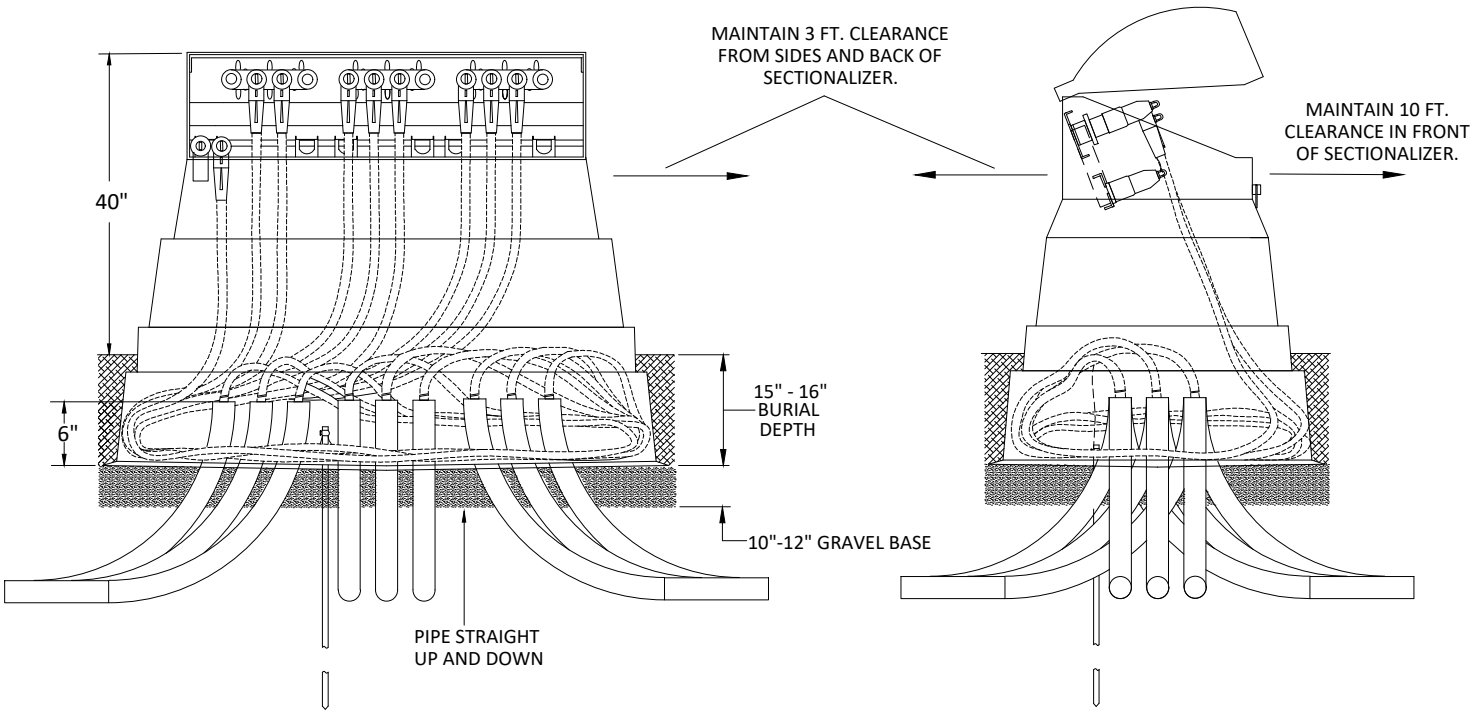

ANY CONDUITS STUBBED OUT FOR FUTURE USE SHALL EXTEND A MINIMUM OF 5' FROM EQUIPMENT. ENDS SHALL BE MARKED WITH 3" DIAMETER GREY PVC CONDUIT, EXTENDING 4' ABOVE GRADE AND PAINTED RED.

Bluebonnet	DATE APPROVED: SEPTEMBER 8, 2016	UNDERGROUND DISTRIBUTION	D-2B

SECONDARY JUNCTION BOX
CONSTRUCTION STANDARD

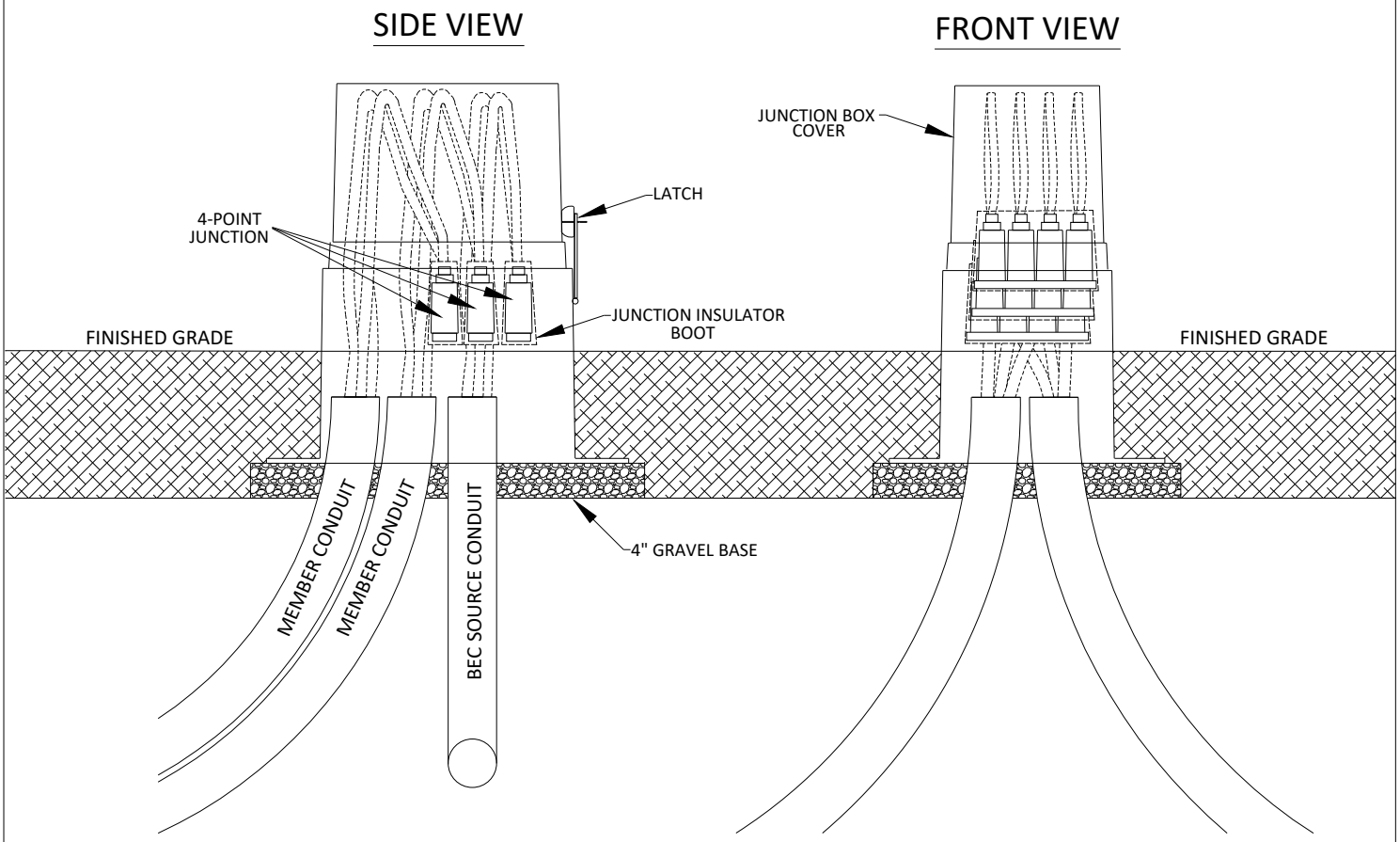

NOTES:

1. A MAXIMUM OF 1 INPUT AND 3 TRIPLEX OUTPUTS AND CAN BE CONNECTED IN JUNCTION BOX.
   MAX CABLE SIZE CONNECTOR ACCOMMODATES 350 KCM.
2. INSTALL INSULATED PROTECTIVE BOOT ON ALL SECONDARY JUNCTIONS.
3. EVENLY DISPERSE 4OZ. OF INSECTICIDE GRANULES IN PAD OPENING.

UJB SECONDARY JUNCTION BOX	INSECTICIDE GRANULES
UJ1-4A OR UJ1-4B 4PT SECONDARY JUNCTION BOX - QTY 3	U3P90-48 PVC ELBOW
GRAVEL	ID TAGS, COLORED TAPE, LABELS

Bluebonnet	DATE APPROVED: AUGUST 15, 2015	UNDERGROUND DISTRIBUTION	E-1

SECONDARY JUNCTION BOX DIMENSIONS

TOP VIEW

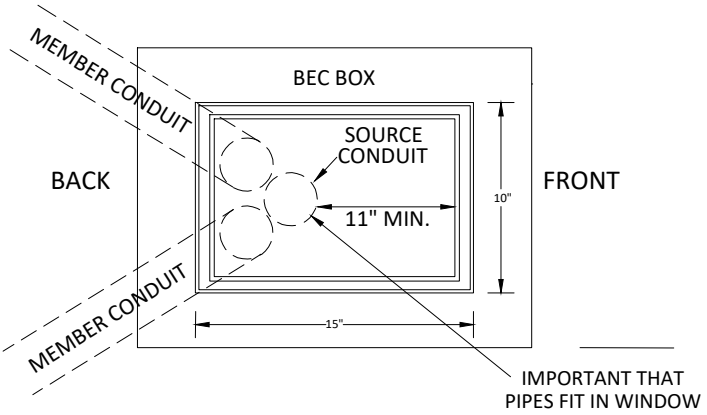

MEMBER SHALL PROVIDE 2" OR 3" SCH 40 PVC CONDUIT ELBOW WITH 10' OF ADDITIONAL CABLE RUN.

MAX ONE CONDUIT PER MEMBER UNLESS WRITTEN APPROVAL BY BEC PERSONNEL.

SIDE VIEW

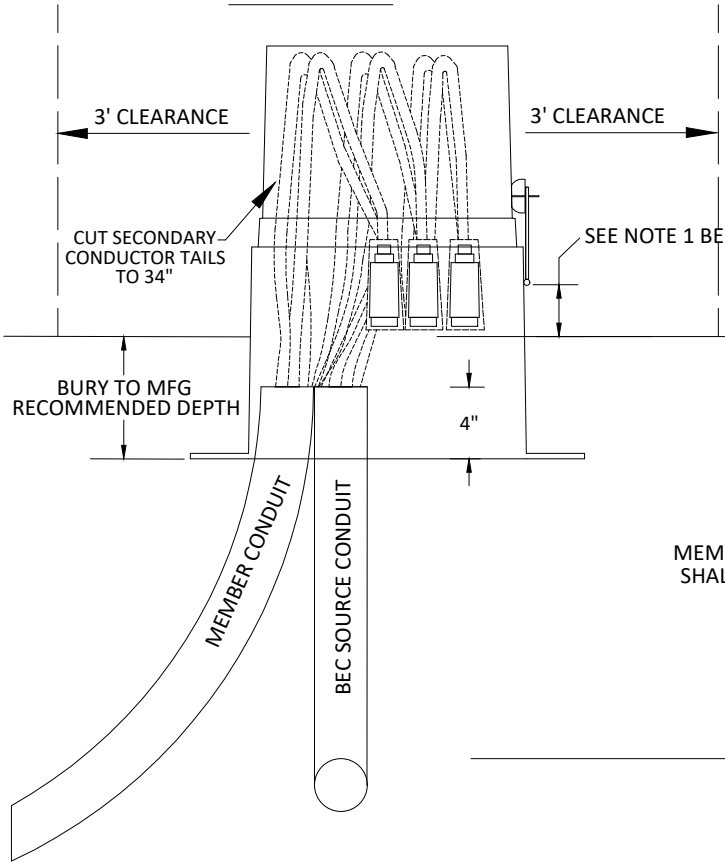

FRONT VIEW

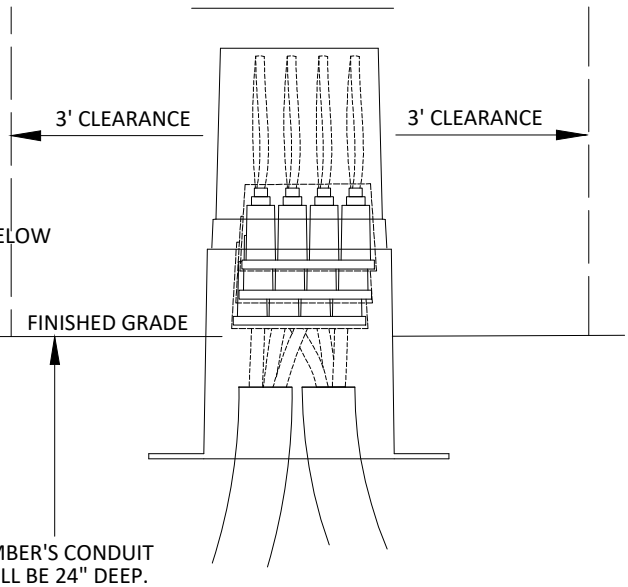

NOTES:

1. LATCH AND LOCK SHALL REMAIN ABOVE GROUND LEVEL.
2. MAINTAIN 3FT CLEARANCE FROM ALL SIDES OF JUNCTION BOX.

Bluebonnet	DATE APPROVED: SEPTEMBER 22 , 2015	UNDERGROUND DISTRIBUTION	E-2

USGE-9 SWITCHGEAR
CONSTRUCTION STANDARD

SOURCE

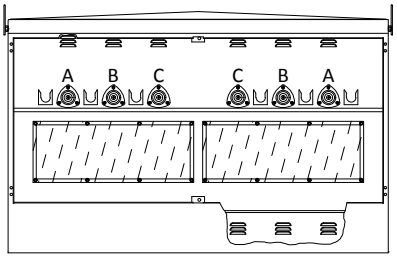

TAP

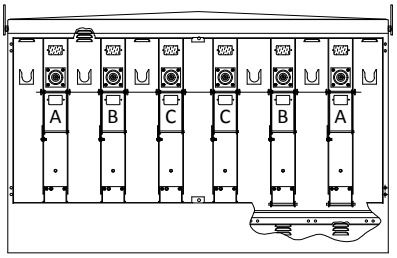

FRONT VIEW

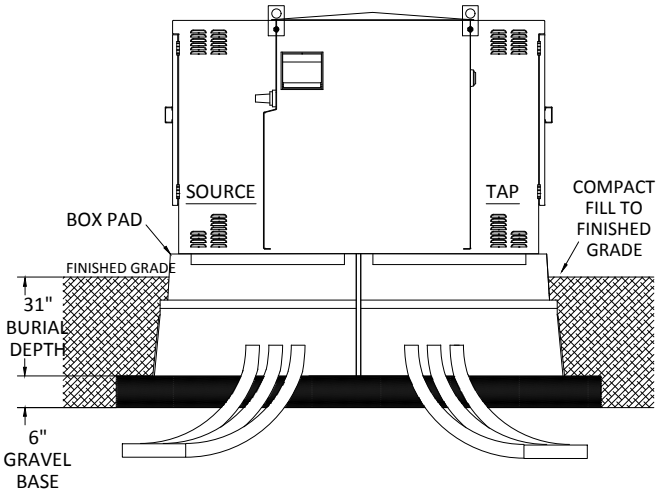

TOP VIEW

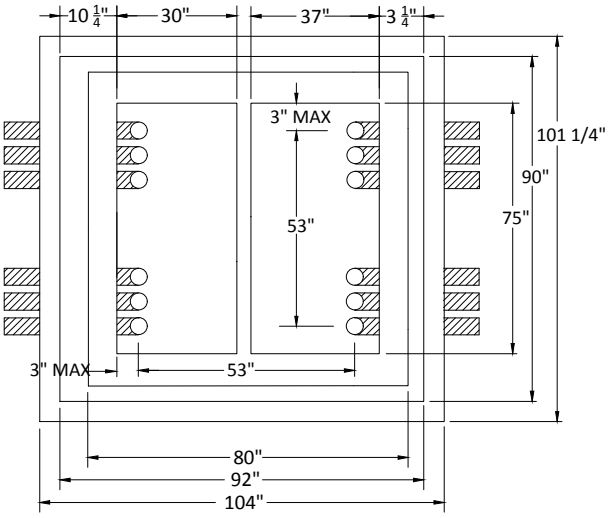

BEC STK#:	QTY:	MATERIAL USGE-9:
13119	1	SWITCHGEAR, AIR, 2-200 FUSE, 2-600 SWITCHES
10988	2	ROD, GROUND 5/8" X 8', 13 MIL CU CLAD
10262	2	CLAMP, GRD ROD GALV 3/4 L
10333	13	CONN, SPLIT BOLT CC #2 L
11196	6.148 lbs	WIRE, COPPER BARE S.D. #2 7 STR L
10732	4	INSECTICIDE ANT CONTROL L
10779	6	LOCK, PADLOCK, STANDARD WITH BEC LOGO
10386	6	CONN,INSUL.L.B.PARKING STAND L
10237	6	CAPS, ASSY GRD TERMINATION L
11202	26.12 lbs	WIRE, COPPER BARE 4/0 19 STR L
10172	6	BUSHING, LB INSERT 25KV L
14300	6	FITTING, FUSE END, SM-20, 15/25 KV L

Bluebonnet	DATE APPROVED: MARCH 8, 2017	UNDERGROUND DISTRIBUTION

USGE-10 SWITCHGEAR
CONSTRUCTION STANDARD

SOURCE

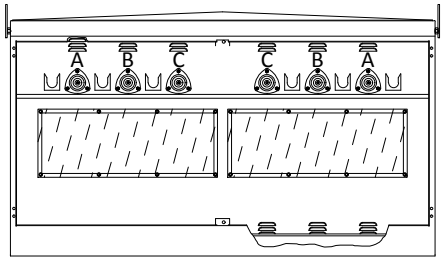

TAP

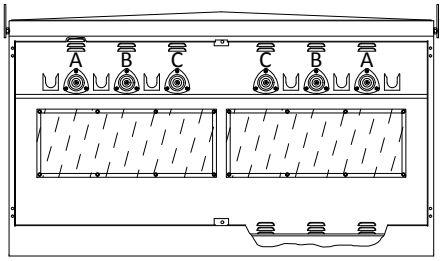

FRONT

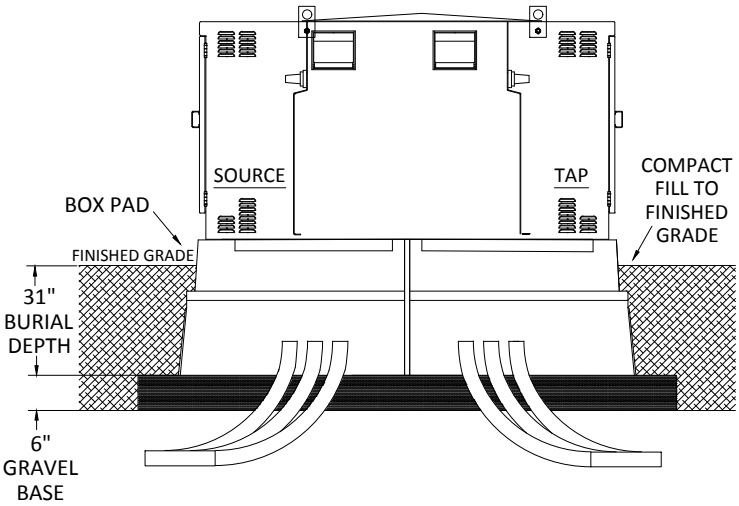

TOP VIEW

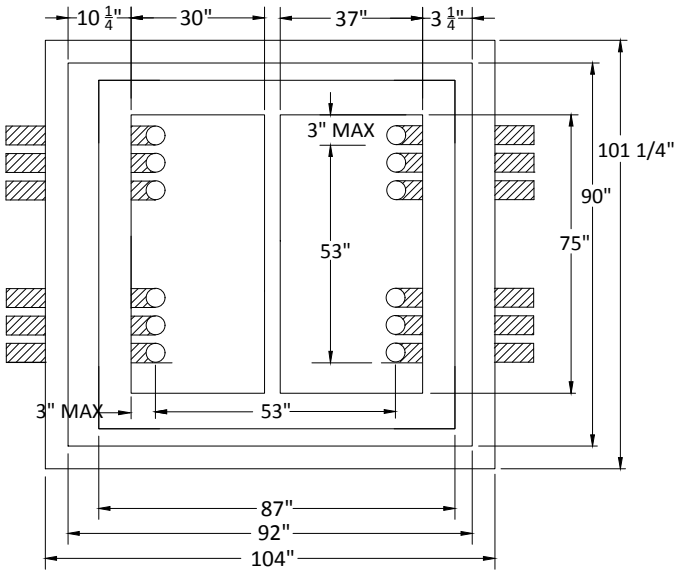

BEC STK#:	QTY:	MATERIAL USGE-10:
13130	1	SWITCHGEAR, AIR, PADMOUNTED, 4-600 SWITCHES
10988	2	ROD, GROUND 5/8" X 8', 13 MIL CU CLAD
10262	2	CLAMP, GRD ROD GALV 3/4 L
10333	13	CONN, SPLIT BOLT CC #2 L
11196	6.148 lbs	WIRE, COPPER BARE S.D. #2 7 STR L
10732	4	INSECTICIDE ANT CONTROL L
10779	10	LOCK, PADLOCK, STANDARD WITH BEC LOGO
11202	26.12 lbs	WIRE, COPPER BARE 4/0 19 STR L

Bluebonnet	DATE APPROVED: MARCH 8, 2017	UNDERGROUND DISTRIBUTION

USGE-11 SWITCHGEAR
CONSTRUCTION STANDARD

SOURCE

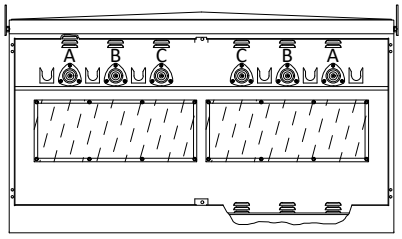

TAP

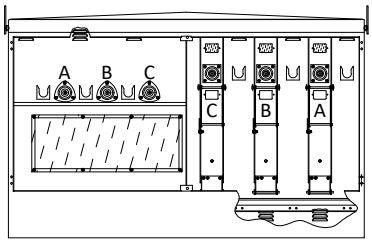

FRONT

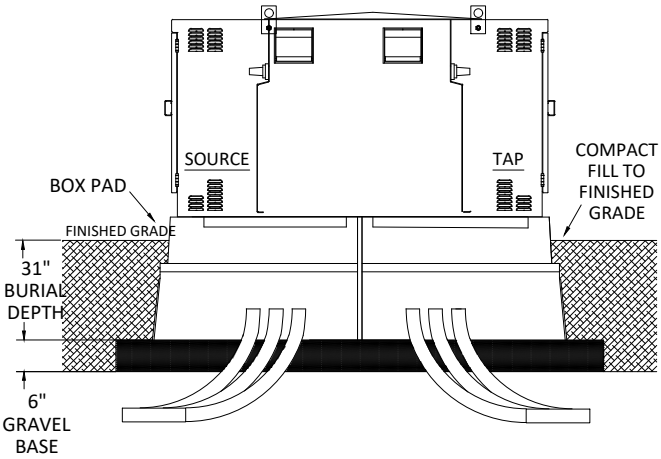

TOP VIEW

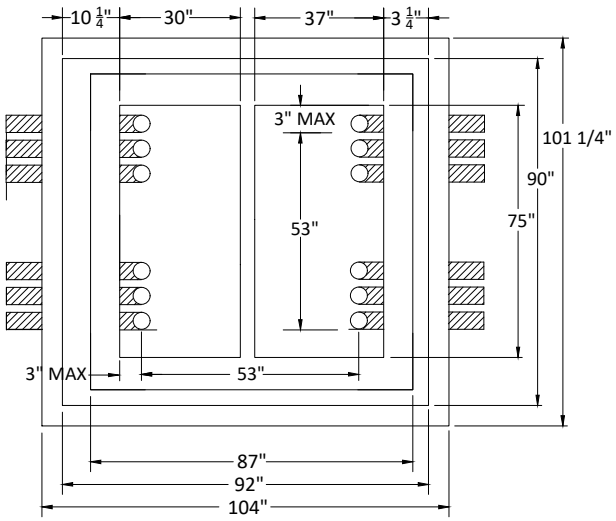

BEC STK#:	QTY:	MATERIAL USGE-11:
12971	1	SWITCHGEAR, AIR, 1-200 FUSE, 3-600 SWITCHES
10988	2	ROD, GROUND 5/8" X 8', 13 MIL CU CLAD
10262	2	CLAMP, GRD ROD GALV 3/4 L
10333	13	CONN, SPLIT BOLT CC #2 L
11196	6.148 lbs	WIRE, COPPER BARE S.D. #2 7 STR L
10732	4	INSECTICIDE ANT CONTROL L
10779	8	LOCK, PADLOCK, STANDARD WITH BEC LOGO
10386	3	CONN,INSUL.L.B.PARKING STAND L
10237	3	CAPS, ASSY GRD TERMINATION L
11202	26.12 lbs	WIRE, COPPER BARE 4/0 19 STR L
10172	3	BUSHING, LB INSERT 25KV L
14300	3	FITTING, FUSE END, SM-20, 15/25 KV L

Bluebonnet	DATE APPROVED: MARCH 8, 2017	UNDERGROUND DISTRIBUTION

Metering Guidelines

Latest Update to all specs can be found at **Bluebonnetelectric.coop**

For the member's safety, wiring installation and material shall conform to the requirements of the NEC, TDLR and NESC. All Wiring Installations must also meet local guidelines, if applicable, set forth but the city, county, or other governing entity in the event these requirements are more stringent than Bluebonnet specifications.

General Notes

Applicable to All Specs

1. Weatherproof fittings are required for all connections.
2. The main electrical disconnect for each electrical service, if not mounted on a Bluebonnet pole or on an approved rack, shall be unenclosed and installed on the exterior of the building or approved structure in a location approved by Bluebonnet Electric Cooperative
3. Meter assembly must remain unenclosed on the exterior of a structure.
4. Meter assembly cannot be mounted on a mobile home.
5. Any part of a meter rack or equipment rack shall be a minimum of six feet from Bluebonnet poles or equipment, and shall not impede access for maintenance to Bluebonnet's poles or equipment.
6. Bluebonnet poles must remain free of structures and private attachments other than the meter loop/meter loop riser assembly.
7. Meter loops or risers shall be installed on pole by Bluebonnet.
8. All secondary connections are to be made by Bluebonnet.
9. Neutral(s) must be insulated and may only be reduced two sizes on residential applications. No reduction of the neutral(s) is allowed on commercial applications.
10. Each phase must be sized to accommodate the total main fuses or breakers installed
11. Electric service to fire pumps shall be served through a CT-metered service.
12. Where three-phase is used to provide single-phase service to individual occupants, the load must be balanced between all three phases as equally as possible. This applies whether the single phase services are individually metered or not.
13. For all jobs requiring excavation, including rack or underground, the individual or contractor performing the work shall call TEXAS811 for locating jobs before digging to Bluebonnet equipment. No private utilities will be located.
14. Mobile Home Feeder Cables may not be used from Transformer or UJB to Meter unless the fourth (Green or Bare) Ground wire can be and is removed before installing.

CT Metering Notes

Applies to: MS-112B1, MS-112B3, MS-113B1, MS-113B3, MS-114A1, MS-114B3, MS-115-1, MS-115-3, MS-202A1, MS-202B3, MS-204B1, MS-204B2, MS-204B3, MS-207B, MS-301B, MS-301C, MS-406A, MS-533-1, MS-533-3, MS-554-1, MS-554-3

1. CT Enclosures may be purchased from Techline **(512-332-2978)** and Installed by Member:
   Minimum Size 1 Phase: Main Enclosure 30” x 30” x 12”
   Backup Enclosure 24” x 30” x 13”
   Minimum Size 3 Phase: Main Enclosure 42” x 30” x 13”
   Backup Enclosure 24” x 30” x 13”
2. CT enclosures may be purchased at any supplier as long as it meets the minimum dimensions and is able to accommodate a Bluebonnet pad lock.
3. Bluebonnet to provide CTs.
4. The electrical contractor will notify Bluebonnet 72 hours in advance to schedule Bluebonnet personnel to deliver the CT’s. The electrician shall install the CT’s on the rack with the correct polarity before the conductor is brought through the CT enclosure. Call **(800-842-7708)** to schedule a connect.
5. Electric service to fire pumps shall be served through a CT-metered service.

Standby Generator Notes

Applies to: MS-400, MS-401, MS-401A, MS-402, MS-402A, MS-403, MS-404, MS-405, MS-406, MS-406A, MS-407, MS-408, MS-412

1. Generators shall be placed a minimum of 15’ away from Bluebonnet’s pole(s) and/or equipment and outside of Bluebonnet’s easement.
2. Transfer switches may be on Bluebonnet pole, only if they are in place of a main panel. They may not be in addition to a panel.
3. Any transfer switch that serves as a main (first device past meter) must be service rated
4. Generators must be connected with a dedicated transfer switch. Breaker interlocks are not acceptable.
5. Portable generators may be connected to an inlet through a transfer switch.
6. Transfer switches that plug into the meter base are not acceptable.

Renewable Energy Connection Notes

Applies to: MS-501, MS-502, MS-507T, MS-553-1, MS-553-3, MS-554-1, MS-554-3, MS-41115, MS-41119

1. The solar and/or battery disconnect(s), if not mounted on an approved rack, shall be installed on the exterior of the building or approved structure in a location approved by Bluebonnet Electric Cooperative.
2. DG disconnect must be clearly labeled and identified.
3. Bluebonnet poles must remain free of structures and private attachments other than the meter loop assembly or riser.
4. Inspection may be required by local jurisdiction if applicable.
5. DG meter or equipment rack (If Applicable) shall be a minimum of 6’ away from Bluebonnet’s poles and/or equipment.
6. Any installation with Batteries are required to have an accessible disconnect or method of shutdown to disable batteries.

SELF CONTAINED (200 AMPS OR LESS)

☐ Form 2s

Single Phase 3 Wire 120 - 240 Volt
Single Phase 3 Wire 240 - 480 Volt

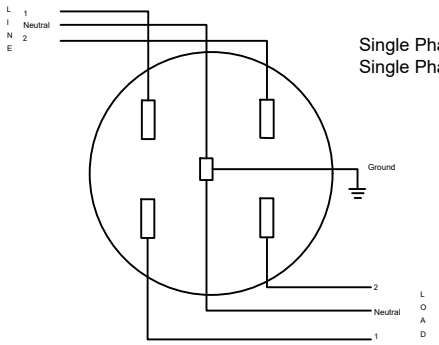

Meter Specs:

- ☐ MS-10115
- ☐ MS-10119
- ☐ MS-102
- ☐ MS-103MT
- ☐ MS-103WT
- ☐ MS-105
- ☐ MS-106
- ☐ MS-106A
- ☐ MS-201
- ☐ MS-206
- ☐ MS-207
- ☐ MS-303

☐ Form 12s

Single Phase 3 Wire 120 - 208 Volt Wye

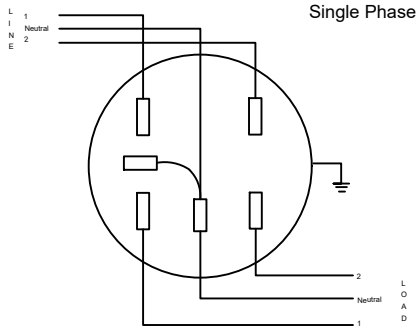

Meter Specs:

- ☐ MS-10115
- ☐ MS-10119
- ☐ MS-102
- ☐ MS-103MT
- ☐ MS-103WT
- ☐ MS-105
- ☐ MS-106
- ☐ MS-106A
- ☐ MS-207B
- ☐ MS-303

☐ Form 12s

Three Phase 3 Wire Straight 480 Volt Delta

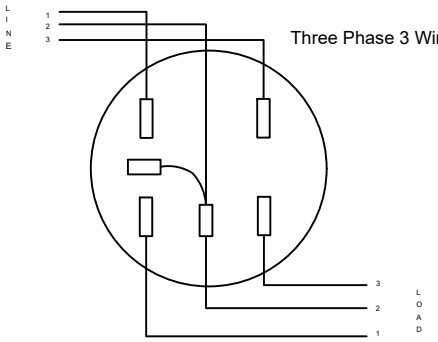

Meter Specs:

- ☐ MS-10115
- ☐ MS-10119
- ☐ MS-102
- ☐ MS-103MT
- ☐ MS-103WT
- ☐ MS-105
- ☐ MS-106
- ☐ MS-106A
- ☐ MS-301A

☐ Form 16s

Three Phase 4 Wire 120 - 208 Volt Wye
Three Phase 4 Wire 120 - 240 Volt Delta
Three Phase 4 Wire 277 - 480 Volt Wye

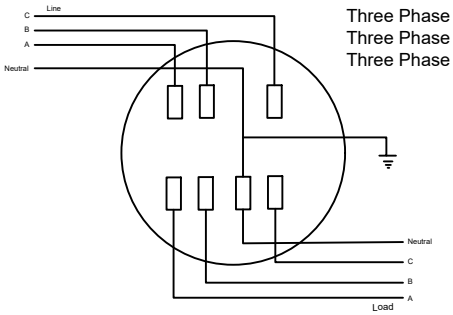

Meter Specs:

- ☐ MS-10115
- ☐ MS-10119
- ☐ MS-102
- ☐ MS-103MT
- ☐ MS-103WT
- ☐ MS-105
- ☐ MS-106
- ☐ MS-106A
- ☐ MS-201
- ☐ MS-207
- ☐ MS-303

CT. RATED (LARGER THAN 200 AMPS)

☐ Form 4s

Single Phase 3 Wire 120 - 240 Volt Over 400 Amp

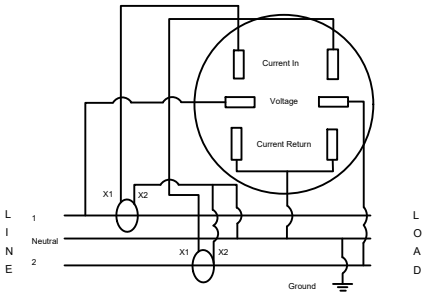

Meter Specs:

- ☐ MS-107MT
- ☐ MS-107WT
- ☐ MS-112B1
- ☐ MS-113B1
- ☐ MS-114A1
- ☐ MS-115-1
- ☐ MS-201A1
- ☐ MS-204B1

☐ Form 9s

Three Phase 4 Wire 120 - 208 Volt Wye
Three Phase 4 Wire 120 - 240 Volt Delta
Three Phase 4 Wire 277 - 480 Volt Wye

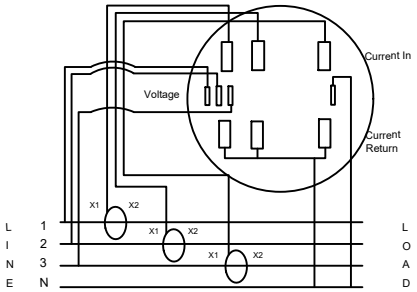

Meter Specs:

- ☐ MS-112B3
- ☐ MS-113B3
- ☐ MS-114B3
- ☐ MS-115-3
- ☐ MS-202B3
- ☐ MS-204A3
- ☐ MS-204B3

☐ Form 45s

Three Phase 3 Wire Straight 480 Volt Delta

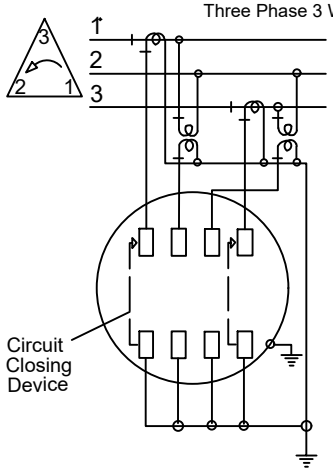

Meter Specs:

- ☐ MS-301B
- ☐ MS-301C

Bluebonnet

METER BASES

drawn:	approved:	date:	
JW	Standards	Jan. 30, 2024	-----

Notes:

1. This meter loop specification is good for the following voltages: 120/240, 120/208, 240/480 & 277/480. Please use MS-301 for straight 480 Delta applications only.
2. Bluebonnet Electric will supply ground rod.
3. On steel poles use a ⅜" X 1½" self tapping screw.
4. For your safety, only Bluebonnet personnel are authorized to install meter loops or other BEC equipment on a Bluebonnet pole. Members shall have loop assembled and available for installation by Bluebonnet.
5. See "Metering Guidelines" for all other applicable notes.

FOR SINGLE PHASE TRAFFIC CONTROL DEVICES:
200amp, 4 terminal, 1-phase, will require a lever by-pass meeting ANSI C12.7, UL 414, and NEMA 3R rating. Lever by-pass is only required for meter installations serving traffic control devices, including railroad, that need to remain functional at all times.

FOR THREE PHASE APPILCATIONS DESCRIPTION:
200amp, 7 terminal, 3-phase, 4-wire will require a lever by-pass meeting ANSI C12.7, UL 414, an NEMA 3R. Meter cans are available for purchase through Techline or any other electrical supplier provided it meets all Bluebonnet Electric Cooperative specifications.

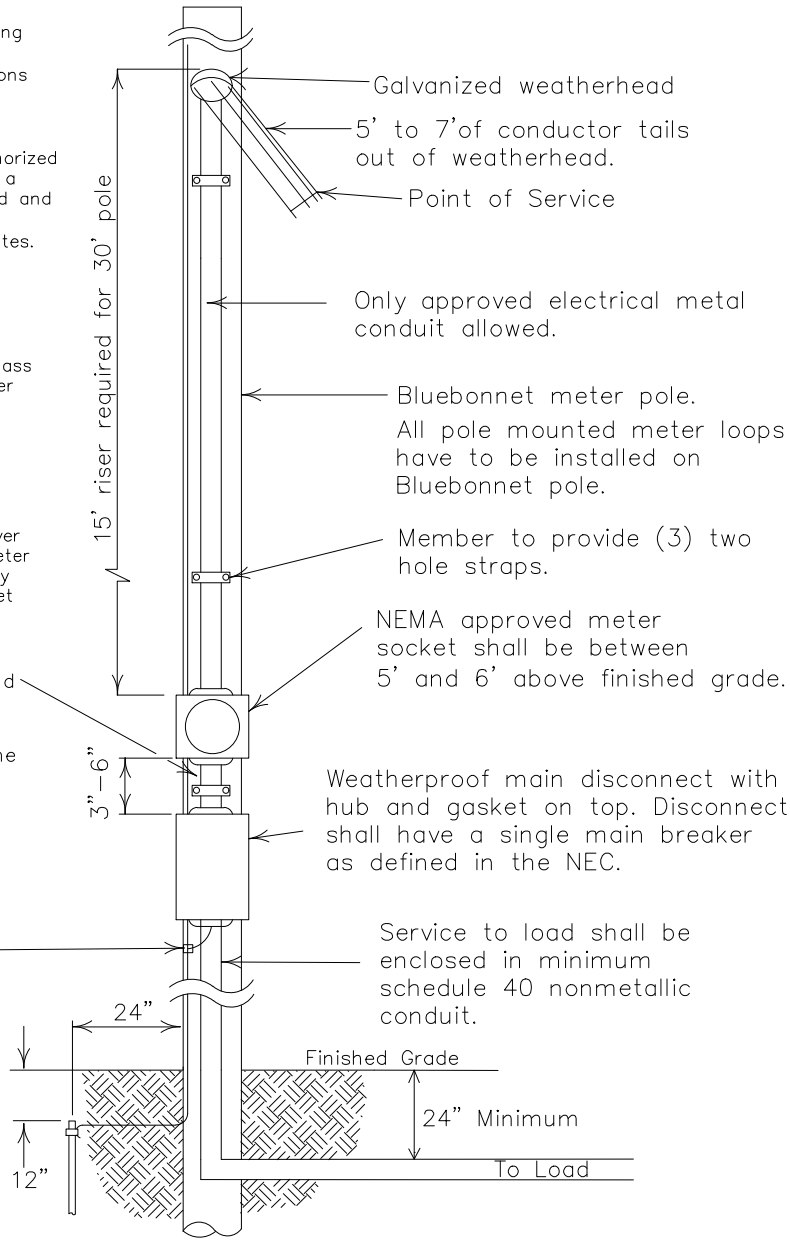

CURRENT CARRYING CAPACITIES AND CONDUIT/NIPPLE SIZE REQUIREMENTS OF STANDARD WIRE SIZES

(RHH, RHW, THW, THWN, THHN, AND XHHW)

REFER TO NEC FOR OTHER CALCULATIONS.

COPPER CONDUCTOR

Wire Size	Breaker Size	Conduit/Nipple Size
#6	60 Amp	1¼" Conduit
#4	100 Amp	1¼" Conduit
#2	125 Amp	1½" Conduit
#1	150 Amp	2" Conduit
#2/0	200 Amp	2" Conduit

ALUMINUM CONDUCTOR

Wire Size	Breaker Size	Conduit/Nipple Size
#4	60 Amp	1¼" Conduit
#2	100 Amp	1¼" Conduit
#1/0	125 Amp	1½" Conduit
#2/0	150 Amp	2" Conduit
#4/0	200 Amp	2" Conduit

15' METER LOOP

1Ø OR 3Ø 60-200 AMP
METER LOOP ON METER POLE
(GOOD FOR VOLTAGES: 120/240, 120/208, 240/480, 277/480)

DATE	REVISIONS
11-27-17	ADDED NIPPLE AFTER CONDUIT SIZE
03-31-20	ADDED NOTE 7
11-04-21	ADDED MAIN BREAKER NOTE

Bluebonnet

Drawn By :	Checked By :	Approved By :
RG	MS COMMITTEE	MS COMMITTEE
Scale : NONE	Date: 11-04-2021	MS-10115

Notes:

1. This meter loop specification is good for the following voltages: 120/240, 120/208, 240/480 & 277/480. Please use MS-301 for straight 480 Delta applications only.
2. Bluebonnet Electric will supply ground rod.
3. On steel poles use a ⅜" X 1½" self tapping screw.
4. For your safety, only Bluebonnet personnel are authorized to install meter loops or other BEC equipment on a Bluebonnet pole. Members shall have loop assembled and available for installation by Bluebonnet.
5. See "Metering Guidelines" for all other applicable notes.

FOR SINGLE PHASE TRAFFIC CONTROL DEVICES:
200amp, 4 terminal, 1-phase, will require a lever by-pass meeting ANSI C12.7, UL 414, and NEMA 3R rating. Lever by-pass is only required for meter installations serving traffic control devices, including railroad, that need to remain functional at all times.

FOR THREE PHASE APPILCATIONS DESCRIPTION:
200amp, 7 terminal, 3-phase, 4-wire will require a lever by-pass meeting ANSI C12.7, UL 414, an NEMA 3R. Meter cans are available for purchase through Techline or any other electrical supplier provided it meets all Bluebonnet Electric Cooperative specifications.

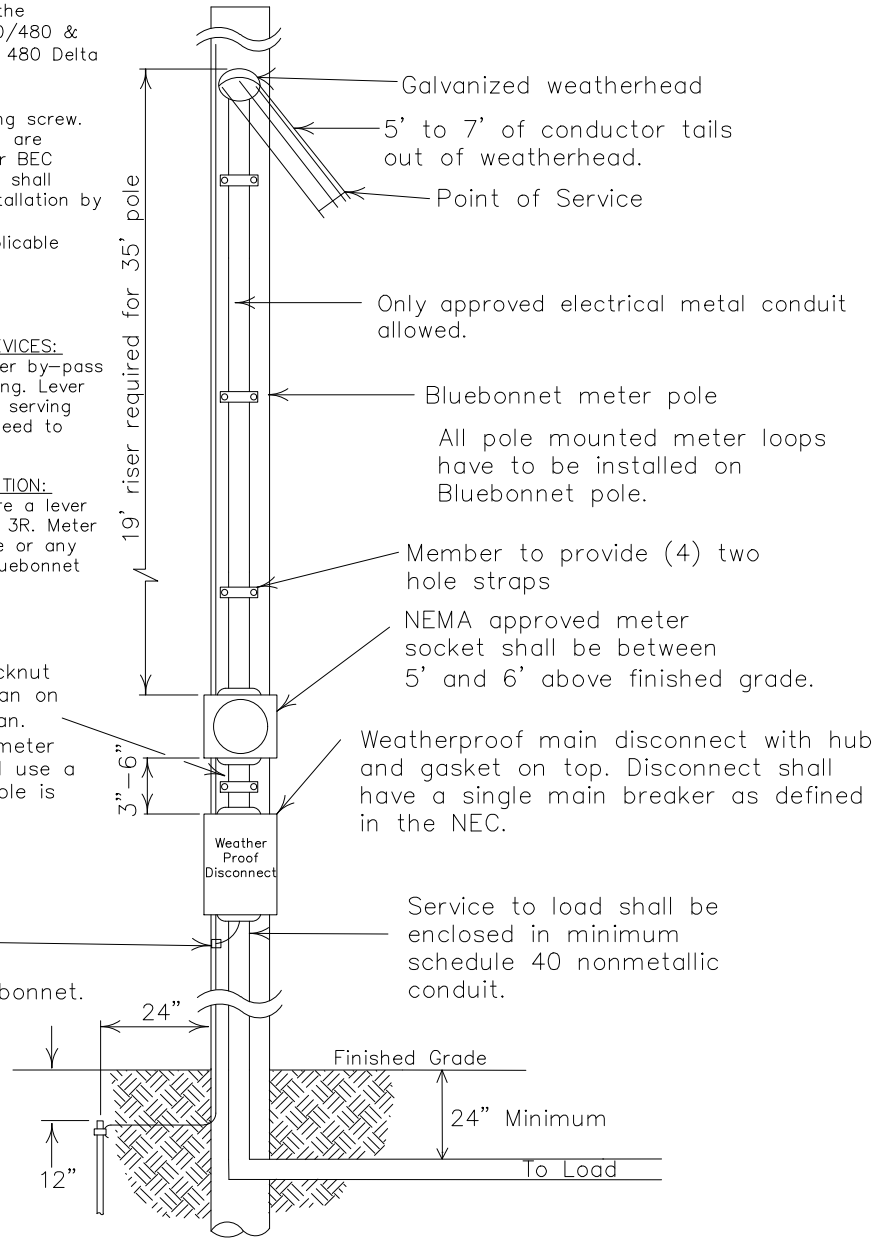

CURRENT CARRYING CAPACITIES AND CONDUIT/NIPPLE SIZE REQUIREMENTS OF STANDARD WIRE SIZES

(RHH, RHW, THW, THWN, THHN, AND XHHW)

REFER TO NEC FOR OTHER CALCULATIONS.

COPPER CONDUCTOR

Wire Size	Breaker Size	Conduit/Nipple Size
#6	60 Amp	1¼" Conduit
#4	100 Amp	1¼" Conduit
#2	125 Amp	1½" Conduit
#1	150 Amp	2" Conduit
#2/0	200 Amp	2" Conduit

ALUMINUM CONDUCTOR

Wire Size	Breaker Size	Conduit/Nipple Size
#4	60 Amp	1¼" Conduit
#2	100 Amp	1¼" Conduit
#1/0	125 Amp	1½" Conduit
#2/0	150 Amp	2" Conduit
#4/0	200 Amp	2" Conduit

19' METER LOOP

1Ø OR 3Ø 60-200 AMP
METER LOOP ON METER POLE
(GOOD FOR VOLTAGES: 120/240, 120/208, 240/480, 277/480)

DATE	REVISIONS
11-27-17	ADDED NIPPLE AFTER CONDUIT SIZE
03-31-20	ADDED NOTE 7
11-04-21	ADDED MAIN BREAKER NOTE

Bluebonnet

Drawn By :	Checked By :	Approved By :
RG	MS COMMITTEE	MS COMMITTEE
Scale : NONE	Date: 11-04-2021	MS-10119

FOR THREE PHASE APPLICATIONS DESCRIPTION:
200amp, 7 terminal, 3-phase, 4-wire will require a lever by-pass meeting ANSI C12.7, UL 414, and NEMA 3R. Meter cans are available for purchase through Techline (Red Rock 512-332-2978) or any other electrical supplier provided it meets all Bluebonnet Electric Cooperative specifications.

FOR SINGLE PHASE TRAFFIC CONTROL DEVICES:
200amp, 4 terminal, 1-phase, will require a lever by-pass meeting ANSI C12.7, UL 414, and NEMA 3R rating. Lever by-pass is only required for meter installations serving traffic control devices, including railroad, that need to remain functional at all times.

Notes:

1. This meter loop specification is good for the following voltages: 120/240, 120/208, 277/480, 240/480 (Single phase only). Please use MS-301 for straight 480 Delta applications.
2. Bluebonnet Electric will supply ground rod.
3. On steel poles use a ⅜" x 1½" self tapping screw.
4. For your safety, only Bluebonnet personnel are authorized to install meter loops or other BEC equipment on a Bluebonnet pole. Members shall have loop assembled and available for installation by Bluebonnet.
5. See "Metering Guidelines" for all other applicable notes.

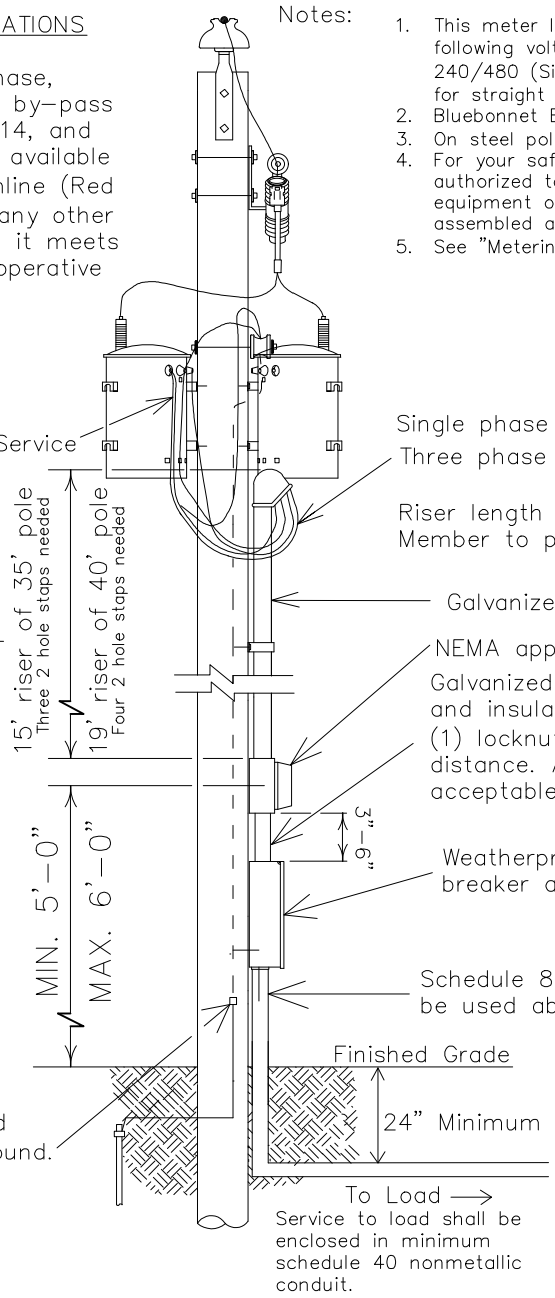

CURRENT CARRYING CAPACITIES AND CONDUIT/NIPPLE SIZE REQUIREMENTS OF STANDARD WIRE SIZES

(RHH, RHW, THW, THWN, AND XHHW)

REFER TO NEC FOR OTHER CALCULATIONS.

COPPER CONDUCTOR			ALUMINUM CONDUCTOR		
Wire Size	Breaker Size	Conduit/Nipple Size	Wire Size	Breaker Size	Conduit/Nipple Size
#6	60 Amp	1¼" Conduit	#4	60 Amp	1¼" Conduit
#4	100 Amp	1¼" Conduit	#2	100 Amp	1¼" Conduit
#2	125 Amp	1½" Conduit	#1/0	125 Amp	1½" Conduit
#1	150 Amp	2" Conduit	#2/0	150 Amp	2" Conduit
#2/0	200 Amp	2" Conduit	#4/0	200 Amp	2" Conduit

1Ø OR 3Ø 60-200 AMP METER LOOP ON TRANSFORMER POLE

Bluebonnet

DATE	REVISIONS
11-27-17	ADDED NIPPLE AFTER CONDUIT SIZE
03-18-20	ADDED NOTE 8
11-04-21	ADDED MAIN BREAKER NOTE

Drawn By :	Checked By :	Approved By :
RG	MS COMMITTEE	MS COMMITTEE
Scale : NONE	Date: 11-04-2021	MS-102

Notes:
1. Wire sized to total disconnect size. (See Chart Below)
2. Reference NEC SEC. 230.9 (A) for meter clearances that state three feet from openings.
3. Member to provide a secure and reinforced point to connect service attachment.
4. See "Metering Guidelines" for all other applicable notes.

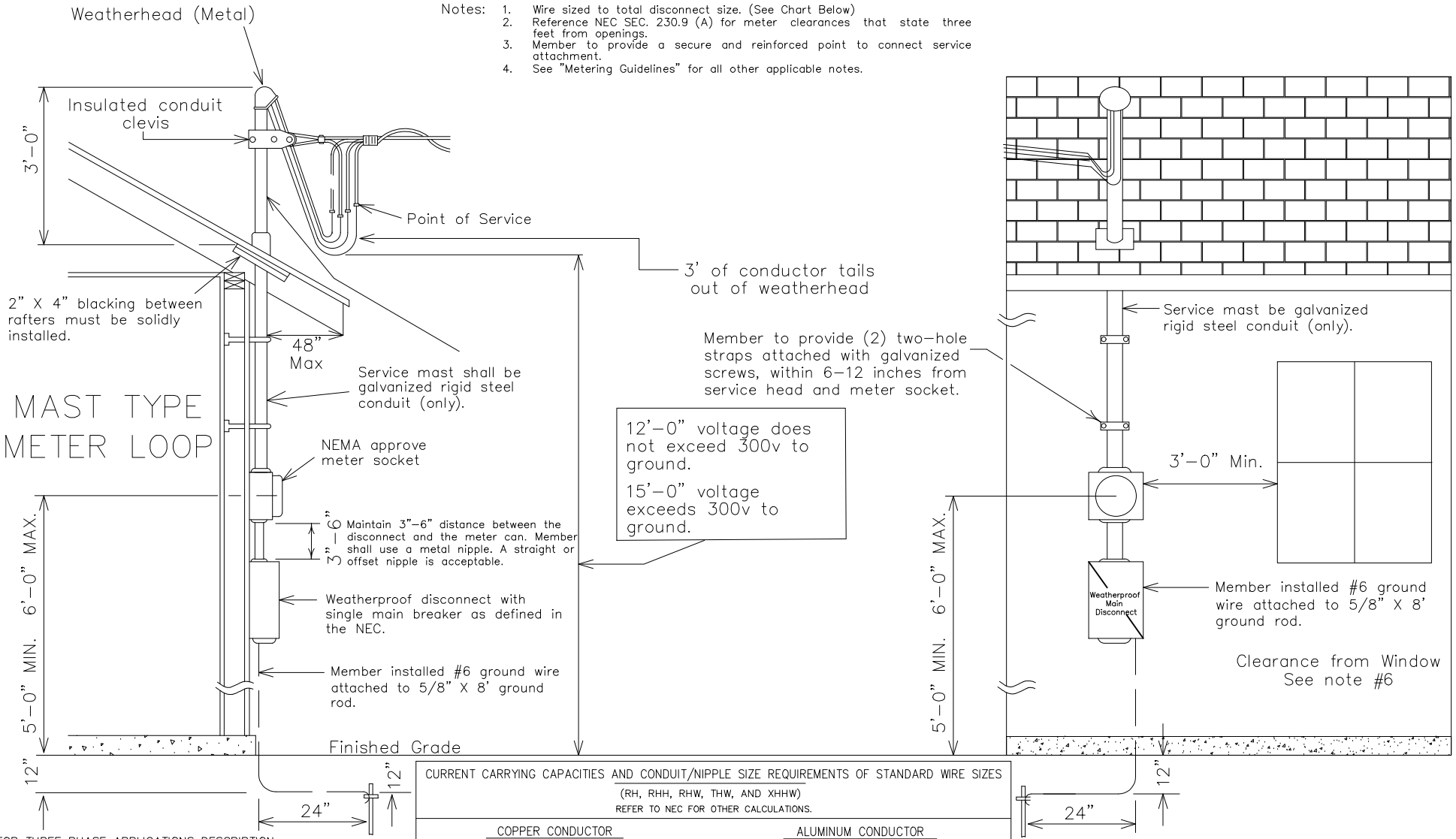

FOR THREE PHASE APPLICATIONS DESCRIPTION:
200amp, 7 terminal, 3-phase, 4-wire will require a lever by-pass meeting ANSI C12.7, UL 414, and NEMA 3R. Meter cans are available for purchase through Techline or any other electrical supplier provided it meets all Bluebonnet Electric Cooperative specifications.
Techline (512-332-2978)

CURRENT CARRYING CAPACITIES AND CONDUIT/NIPPLE SIZE REQUIREMENTS OF STANDARD WIRE SIZES
(RH, RHH, RHW, THW, AND XHHW)
REFER TO NEC FOR OTHER CALCULATIONS.

COPPER CONDUCTOR			ALUMINUM CONDUCTOR		
Wire Size	Breaker Size	Conduit/Nipple Size	Wire Size	Breaker Size	Conduit/Nipple Size
#6	60 Amp	1¼" Conduit	#4	60 Amp	1 "¼Conduit
#4	100 Amp	1¼" Conduit	#2	100 Amp	1 "¼Conduit
#2	125 Amp	1½" Conduit	#1/0	125 Amp	1 "½Conduit
#1	150 Amp	2" Conduit	#2/0	150 Amp	2" Conduit
#2/0	200 Amp	2" Conduit	#4/0	200 Amp	2" Conduit

Bluebonnet

1Ø OR 3Ø 60-200 AMP METER LOOP ON BUILDING, MAST TYPE

DATE	REVISIONS
11-27-17	ADDED NIPPLE TO CONDUIT SIZE
11-04-21	ADDED MAIN BREAKER NOTE

Drawn By :	Checked By :	Approved By :
RG	MS COMMITTEE	MS COMMITTEE
Scale : NONE	Date: 11-04-21	MS-103MT

Notes:

1. Wire sized to total disconnect size. (See Chart Below)
2. Reference NEC SEC. 230.9 (A) for meter clearances that state three feet from openings.
3. Member to provide a secure and reinforced point to connect service attachment.
4. See "Metering Guidelines" for all other applicable notes.

FOR THREE PHASE APPLICATIONS
DESCRIPTION:
200amp, 7 terminal, 3–phase, 4–wire will require a lever by–pass meeting ANSI C12.7, UL 414, and NEMA 3R. Meter cans are available for purchase through Techline or any other electrical supplier provided it meets all Bluebonnet Electric Cooperative specifications.
Techline (512–332–2978)

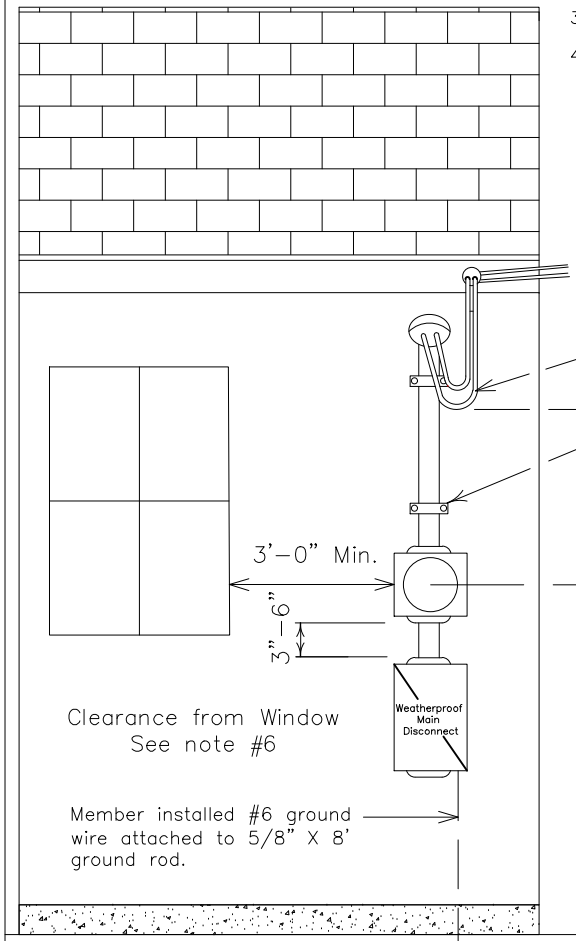

12'–0" voltage does not exceed 300v to ground.
15'–0" voltage exceeds 300v to ground.

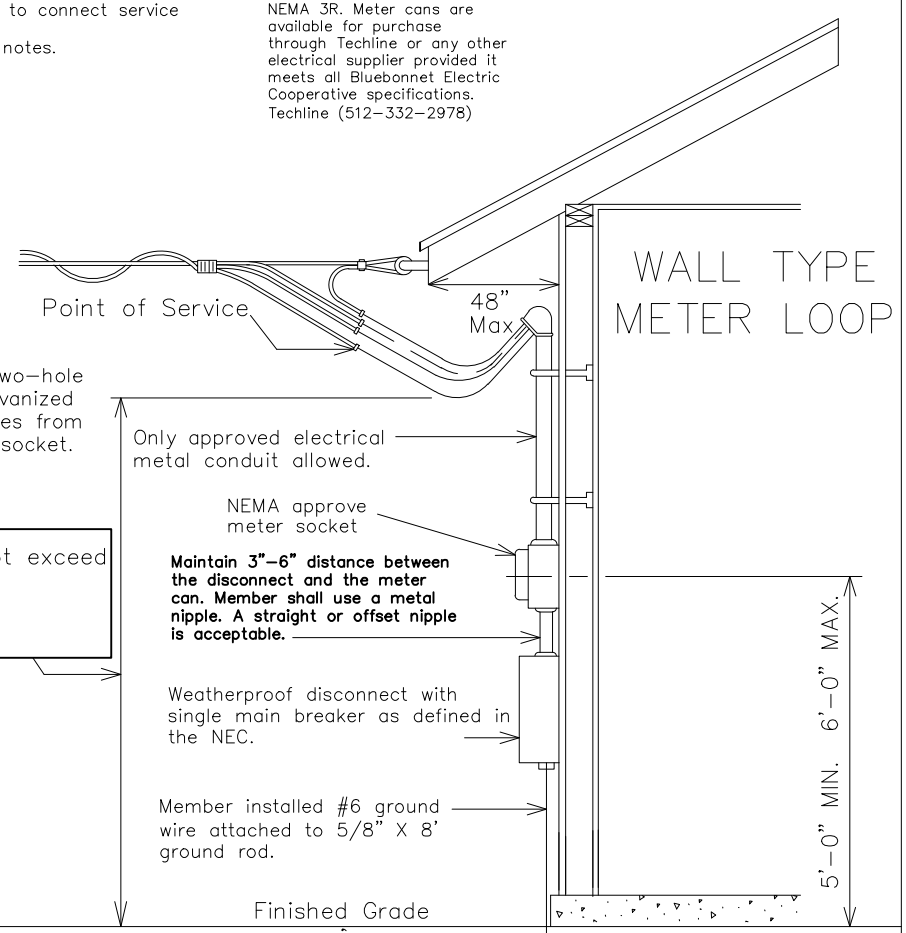

CURRENT CARRYING CAPACITIES AND CONDUIT/NIPPLE SIZE REQUIREMENTS OF STANDARD WIRE SIZES
(RH, RHH, RHW, THW, AND XHHW)
REFER TO NEC FOR OTHER CALCULATIONS.

COPPER CONDUCTOR			ALUMINUM CONDUCTOR		
Wire Size	Breaker Size	Conduit/Nipple Size	Wire Size	Breaker Size	Conduit/Nipple Size
#6	60 Amp	1¼" Conduit	#4	60 Amp	1¼" Conduit
#4	100 Amp	1¼" Conduit	#2	100 Amp	1¼" Conduit
#2	125 Amp	1½" Conduit	#1/0	125 Amp	1½" Conduit
#1	150 Amp	2" Conduit	#2/0	150 Amp	2" Conduit
#2/0	200 Amp	2" Conduit	#4/0	200 Amp	2" Conduit

Bluebonnet

1Ø OR 3Ø 60–200 AMP METER LOOP ON BUILDING, WALL TYPE

Date	REVISIONS
11–27–17	ADDED NIPPLE TO CONDUIT SIZE
11–04–21	ADDED MAIN BRAKER NOTE

Drawn By :	Checked By :	Approved By :
RG	MS COMMITTEE	MS COMMITTEE
Scale : NONE	Date: 11–04–20	MS–103WT

Notes:

1. Line taps shall be made in the galvanized trough by the electrical contractor.
   No more than (2) conductors per phase shall be allowed.
2. No more than (2) risers will be connected per installation.
3. Wire sized to total disconnect sizes. (See Chart Below)
4. If secondary service exceeds (2) 2", 3", or 4" approved electrical metal conduit; BEC will install a primary underground transformer at member's expense.
5. Maintain 3"–6" distance between the disconnect and the meter can. Member shall use a metal nipple. A straight or offset nipple is acceptable.
6. #6 solid, bare ground copper wire and clamp attached to Bluebonnet's pole ground.
7. See "Metering Guidelines" for all other applicable notes.

Ⓐ
Transformer Pole Riser Length:
35' Pole = 20' Riser
40' Pole = 24' Riser

Ⓑ
Service Pole Riser Length:
30' Pole = 20' Riser
35' Pole = 24' Riser

Ⓒ
Member's Conduit
Member's conduit shall be installed 8"–12" from pole.

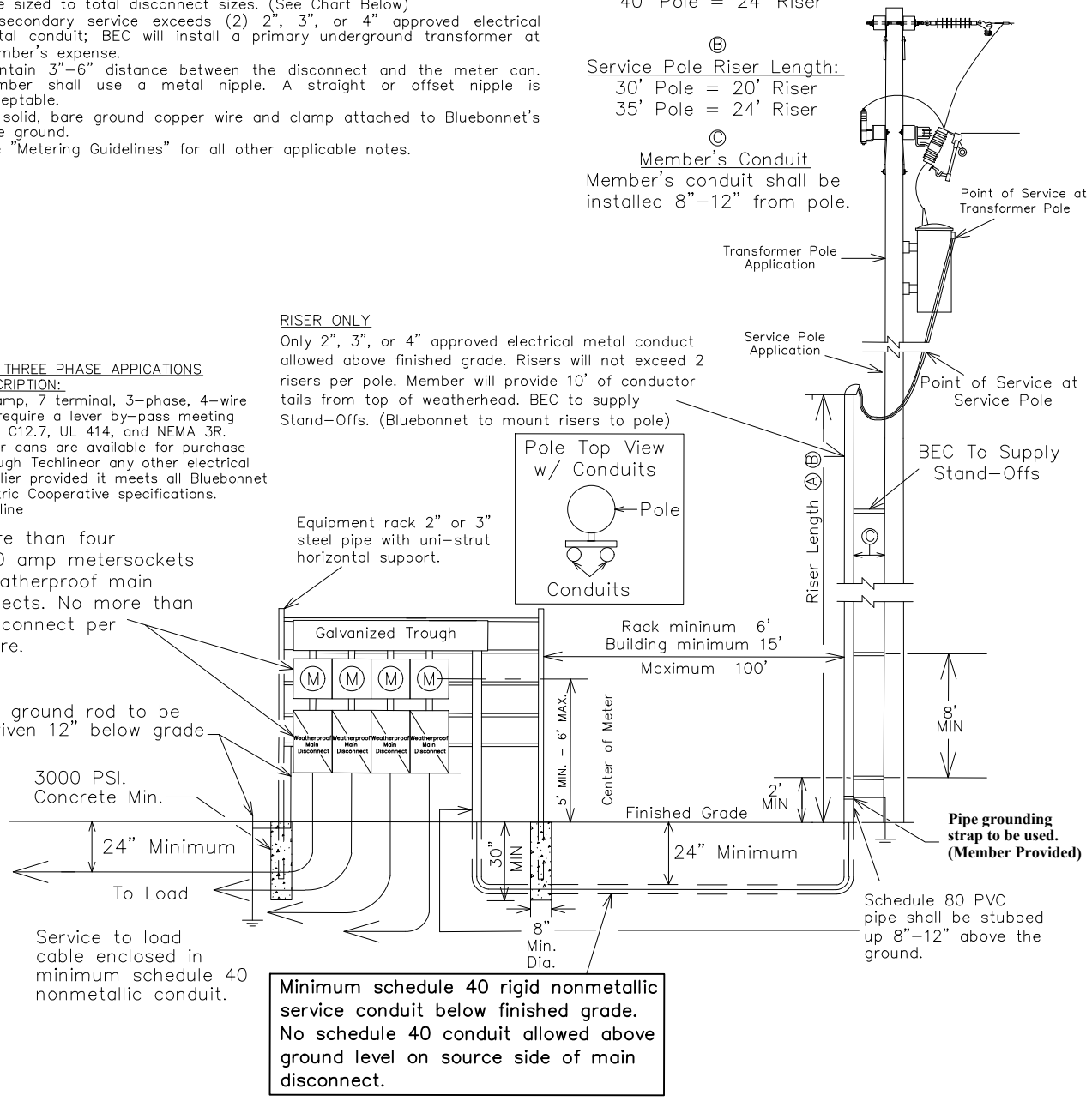

RISER ONLY
Only 2", 3", or 4" approved electrical metal conduct allowed above finished grade. Risers will not exceed 2 risers per pole. Member will provide 10' of conductor tails from top of weatherhead. BEC to supply Stand–Offs. (Bluebonnet to mount risers to pole)

FOR THREE PHASE APPICATIONS
DESCRIPTION:
200amp, 7 terminal, 3–phase, 4–wire will require a lever by–pass meeting ANSI C12.7, UL 414, and NEMA 3R. Meter cans are available for purchase through Techlineor any other electrical supplier provided it meets all Bluebonnet Electric Cooperative specifications. Techline

No more than four 60–200 amp metersockets and weatherproof main disconnects. No more than one disconnect per enclosure.

Service to load cable enclosed in minimum schedule 40 nonmetallic conduit.

CURRENT CARRYING CAPACITIES AND CONDUIT/NIPPLE SIZE REQUIREMENT OF STANDARD WIRE SIZE.
(RHH, RHW, THW, THWN, THHN, AND XHHW)
REFER TO NEC FOR OTHER CALCULATIONS.

WIRE SIZE	COPPER CONDUCTOR/ BREAKER SIZE	CONDUIT/NIPPLE SIZE	ALUMINUM CONDUCTOR WIRE SIZE	BREAKER SIZE	CONDUIT/NIPPLE SIZE
#6	60 AMP	1¼" CONDUIT	#4	60 AMP	1¼" CONDUIT
#4	100 AMP	1¼" CONDUIT	#2	100 AMP	1¼" CONDUIT
#2	125 AMP	1½" CONDUIT	#1/0	125 AMP	1½" CONDUIT
#1	150 AMP	2" CONDUIT	#2/0	150 AMP	2" CONDUIT
#2/0	200 AMP	2" CONDUIT	#4/0	200 AMP	2" CONDUIT

1Ø OR 3Ø 60–200 AMP MULTIPLE METERS ON RACK OR BUILDING NOT TO EXCEED A TOTAL OF 800 AMPS

Bluebonnet

DATE	REVISIONS
12–07–2017	ADDED WIRE SIZING CHART.
11–19–2019	ADDED SOLID COPPER NOTE.
11–04–2021	ADDED MAIN BREAKER NOTE.

Drawn By :	Checked By :	Approved By :
RG	MS COMMITTEE	MS COMMITTEE
Scale : NONE	Date : 11–04–2021	MS–105

CURRENT CARRYING CAPACITIES AND CONDUIT/NIPPLE SIZE REQUIREMENT OF STANDARD WIRE SIZE.
(RHH, RHW, THW, THWN, THHN, AND XHHW)
REFER TO NEC FOR OTHER CALCULATIONS.

COPPER CONDUCTOR

WIRE SIZE	BREAKER SIZE	CONDUIT/NIPPLE SIZE
#6	60 AMP	1¼" CONDUIT
#4	100 AMP	1¼" CONDUIT
#2	125 AMP	1½" CONDUIT
#1	150 AMP	2" CONDUIT
#2/0	200 AMP	2" CONDUIT

ALUMINUM CONDUCTOR

WIRE SIZE	BREAKER SIZE	CONDUIT/NIPPLE SIZE
#4	60 AMP	1¼" CONDUIT
#2	100 AMP	1¼" CONDUIT
#1/0	125 AMP	1½" CONDUIT
#2/0	150 AMP	2" CONDUIT
#4/0	200 AMP	2" CONDUIT

Notes:
1. #6 solid, bare ground copper wire and clamp attached to Bluebonnet's pole ground.
2. See "Metering Guidelines" for all other applicable notes.

Ⓐ Riser Length:

35' Pole = 20' Riser
40' Pole = 24' Riser

FOR THREE PHASE APPLICATIONS
DESCRIPTION:
200amp, 7 terminal, 3-phase, 4-wire will require a lever by-pass meeting ANSI C12.7, UL 414, and NEMA 3R. Meter cans are available for purchase through Techline or any other electrical supplier provided it meets all Bluebonnet Electric Cooperative specifications.

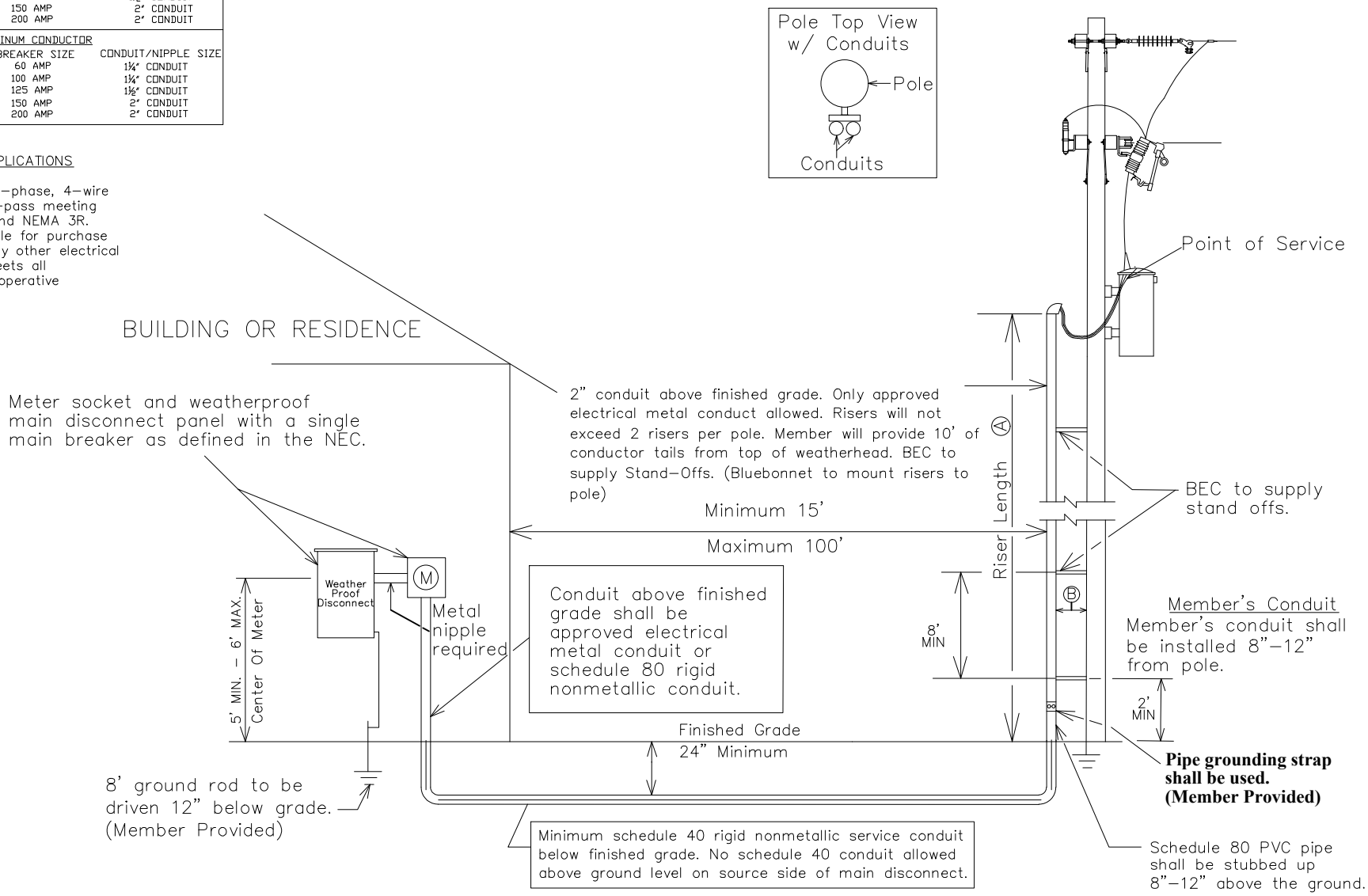

Bluebonnet

1Ø OR 3Ø 60-200 AMP
METER ON BUILDING OR RACK

DATE	REVISIONS
03-29-2018	MOVED DISCONNECT TO THE SIDE OF METER
11-19-2019	ADDED SOLID COPPER NOTE
11-04-2021	ADDED MAIN BREAKER NOTE

Drawn By :	Checked By :	Approved By :
CV	MS COMMITTEE	MS COMMITTEE
Scale : NONE	Date : 11-04-2021	MS-106

CURRENT CARRYING CAPACITIES AND CONDUIT/NIPPLE SIZE REQUIREMENT OF STANDARD WIRE SIZE.

(RHH, RHW, THW, THWN, THHN, AND XHHW)

REFER TO NEC FOR OTHER CALCULATIONS.

COPPER CONDUCTOR

WIRE SIZE	BREAKER SIZE	CONDUIT/NIPPLE SIZE
#6	60 AMP	1¼" CONDUIT
#4	100 AMP	1¼" CONDUIT
#2	125 AMP	1½" CONDUIT
#1	150 AMP	2" CONDUIT
#2/0	200 AMP	2" CONDUIT

ALUMINUM CONDUCTOR

WIRE SIZE	BREAKER SIZE	CONDUIT/NIPPLE SIZE
#4	60 AMP	1¼" CONDUIT
#2	100 AMP	1¼" CONDUIT
#1/0	125 AMP	1½" CONDUIT
#2/0	150 AMP	2" CONDUIT
#4/0	200 AMP	2" CONDUIT

FOR THREE PHASE APPLICATIONS
DESCRIPTION:
200amp, 7 terminal, 3-phase, 4-wire will require a lever by-pass meeting ANSI C12.7, UL 414, and NEMA 3R. Meter cans are available for purchase through Techline or any other electrical supplier provided it meets all Bluebonnet Electric Cooperative specifications.

Notes:
1. #6 solid, bare ground copper wire and clamp attached to Bluebonnet's pole ground.
2. See "Metering Guidelines" for all other applicable notes.

Ⓐ
Riser Length:

35' Pole = 20' Riser
40' Pole = 24' Riser

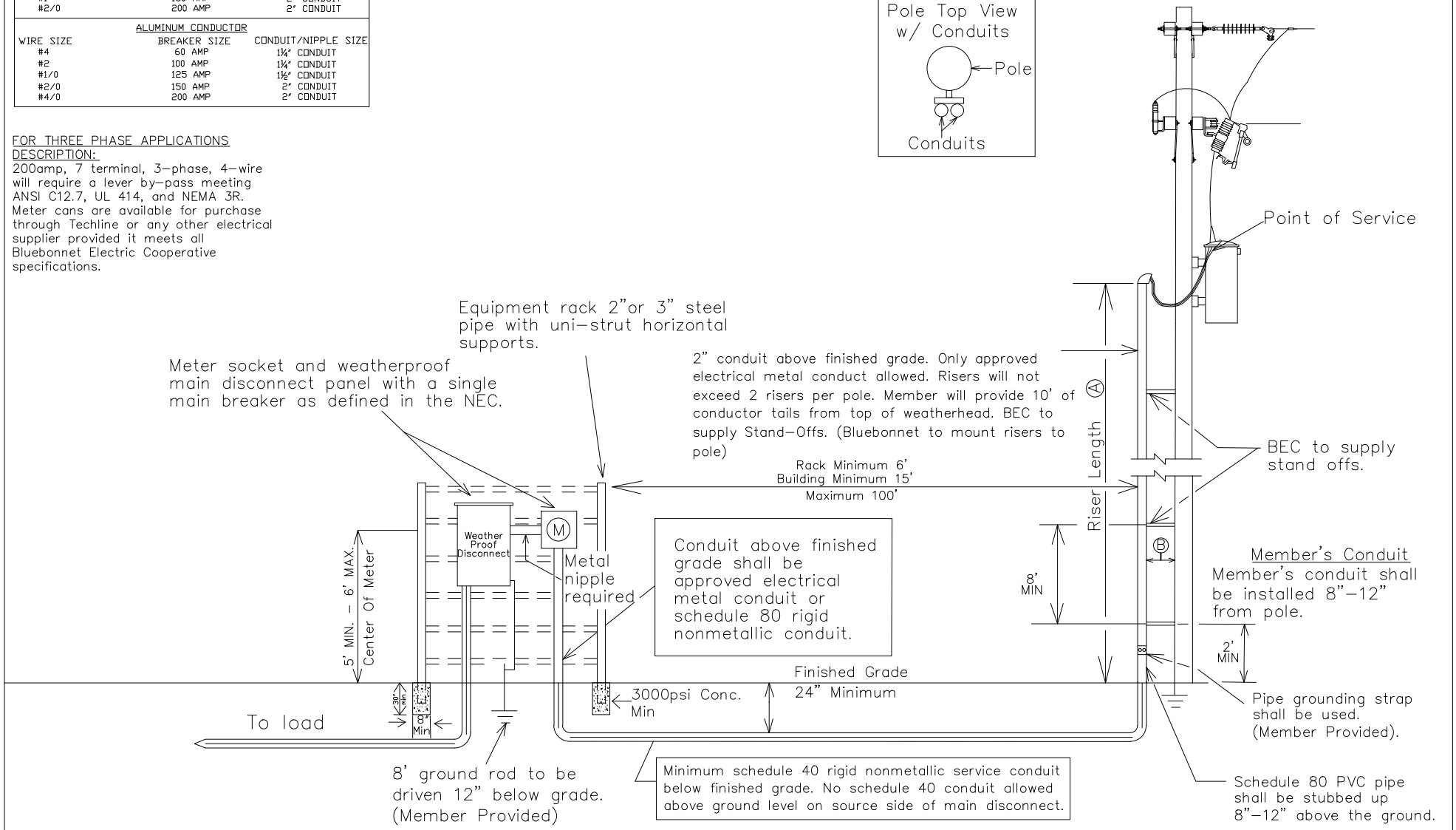

Bluebonnet

1Ø OR 3Ø 60-200 AMP
METER ON RACK

DATE	REVISIONS
03-29-2018	MOVED DISCONNECT TO THE SIDE OF METER
11-19-2019	ADDED SOLID COPPER NOTE
11-04-2021	ADDED MAIN BREAKER NOTE

Drawn By :	Checked By :	Approved By :
DJ	Engineering	Standards
Scale : NONE	Date : 06-27-2023	MS-106A

Notes:

1. Main disconnect panel may not be used as an electrical race way.
2. Any combination of six disconnects totaling no more than 400 amp. REF. NEC, SEC. 230.71.
3. A galvanized trough will have to be used if more than two disconnects are installed. Line taps shall be made by the electrical contractor.
4. Reference NEC SEC. 230.9 (A) for meter clearances that state three feet from opening.
5. All services entering the meter can from a riser will be top fed.
6. Only 400 amp meter can is allowed. 320 amp meter cans are not allowed.
7. A detailed load sheet shall be filled and returned to Bluebonnet before the service will be connected.
8. No wires shall run in the center of the can. (Due to the clearance needed to set the meter.)
9. Largest wire to be pulled in to the meter can is 500 MCM Copper.
10. All service wires entering the meter can (Top or Bottom Feed) will be terminated at the closest lugs. No phase conductors shall be run through the center of the meter can.
11. See "Metering Guidelines" for all other applicable notes.

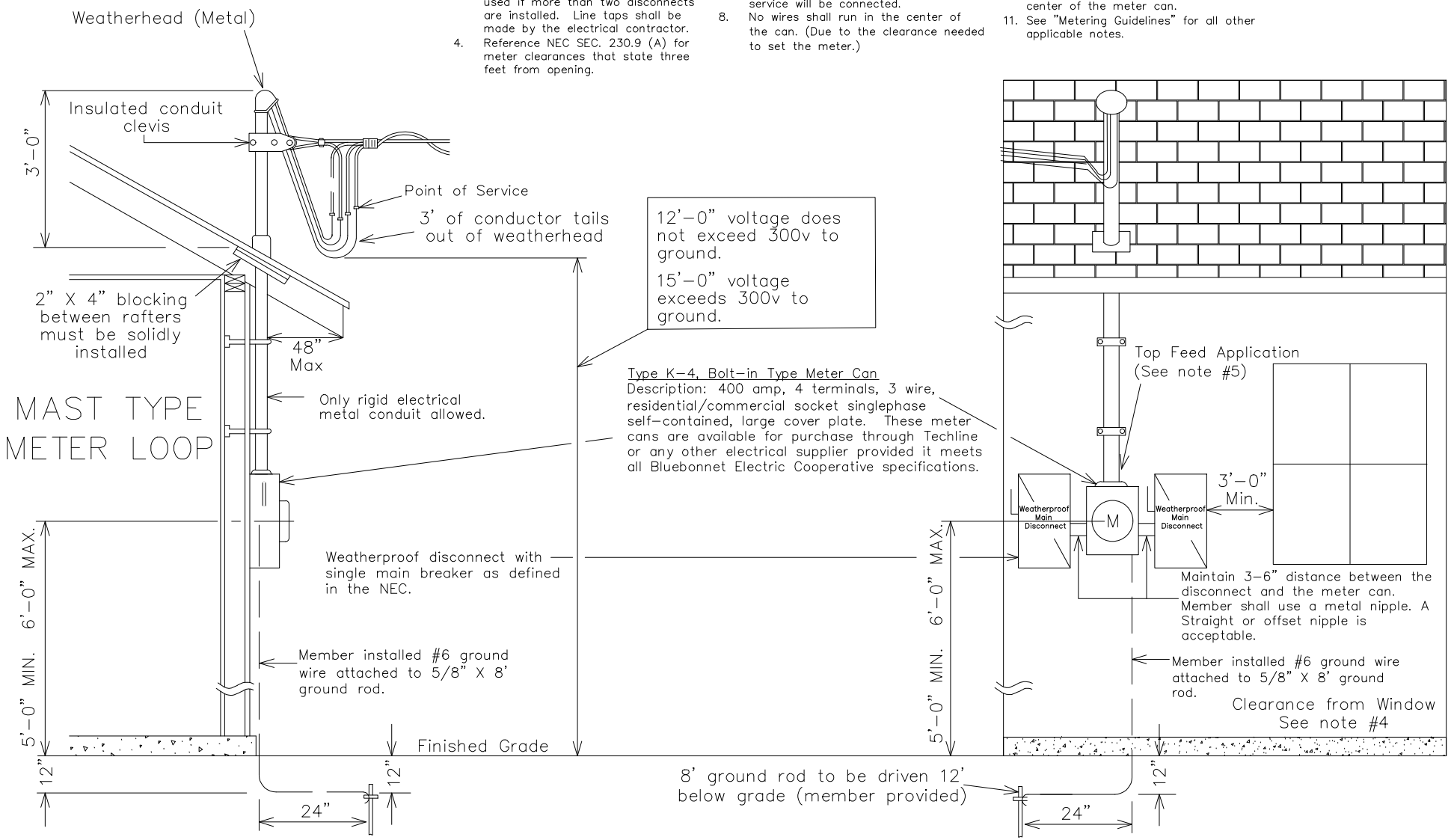

Bluebonnet	1Ø 400 AMP SERVICE WITH METER LOOP ON BUILDING – MAST TYPE	Drawn By : BS	Checked By : MS COMMITTEE	Approved By : MS COMMITTEE
	DATE / REVISIONS: 11/4/2021 ADDED MAIN BREAKER NOTE	Scale : NONE	Date: 11-04-2021	MS-107MT

Notes:

1. Main disconnect panel may not be used as an electrical race way.
2. Any combination of six disconnects totaling no more than 400 amp. REF. NEC, SEC. 230.71.
3. A galvanized trough will have to be used if more than two disconnects are installed. Line taps shall be made by the electrical contractor.
4. Reference NEC SEC. 230.9 (A) for meter clearances that state three feet from openings.
5. All services entering the meter can from a riser will be top fed.
6. Only 400 amp meter can is allowed. 320 amp meter cans are not allowed.
7. A detailed load sheet shall be filled out and returned to Bluebonnet before this service will be connected.
8. No wires shall run in the center of the can. (Due to the clearance needed to set the meter.)
9. Largest wire to be pulled in to the meter can is 500 MCM Copper.
10. All service wires entering the meter can (Top or Bottom Feed) will be terminated at the closest lugs. No phase conductors shall be run through the center of the meter can.
11. See "Metering Guidelines" for all other applicable notes.

(A) Type K-4, Bolt-in Type Meter Can

Description: 400 amp, 4 terminals, 3 wire, residential/commercial socket singlephase self-contained, large coverplate. These meter cans are available for purchase through Techline or any other electrical supplier provided it meets all Bluebonnet Electric Cooperative specifications.

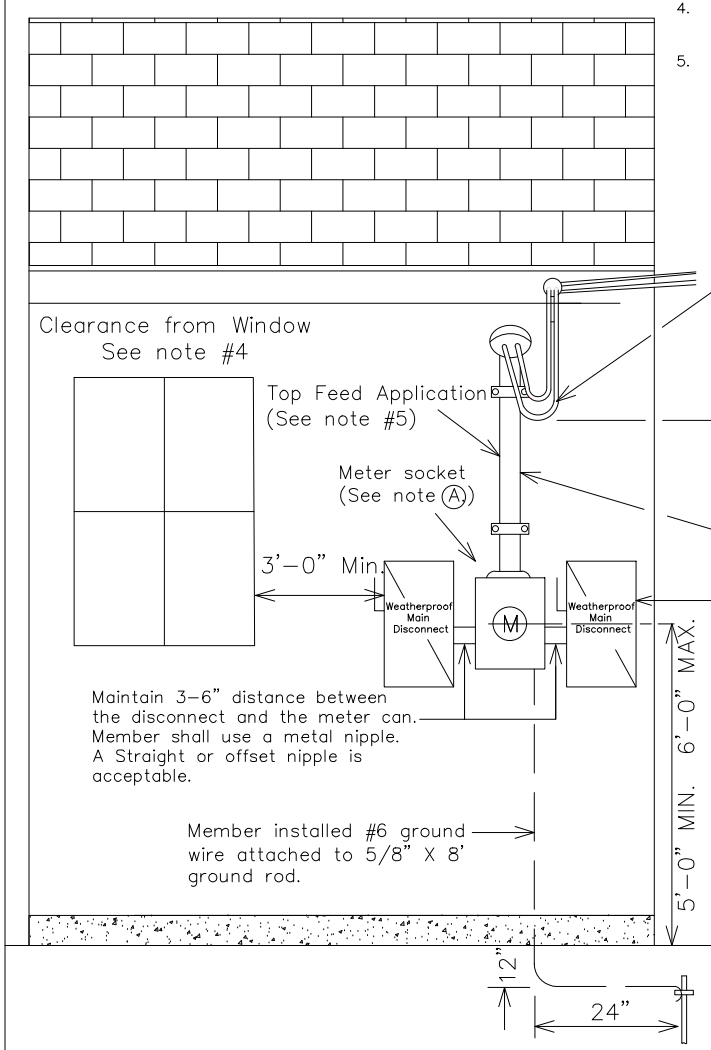

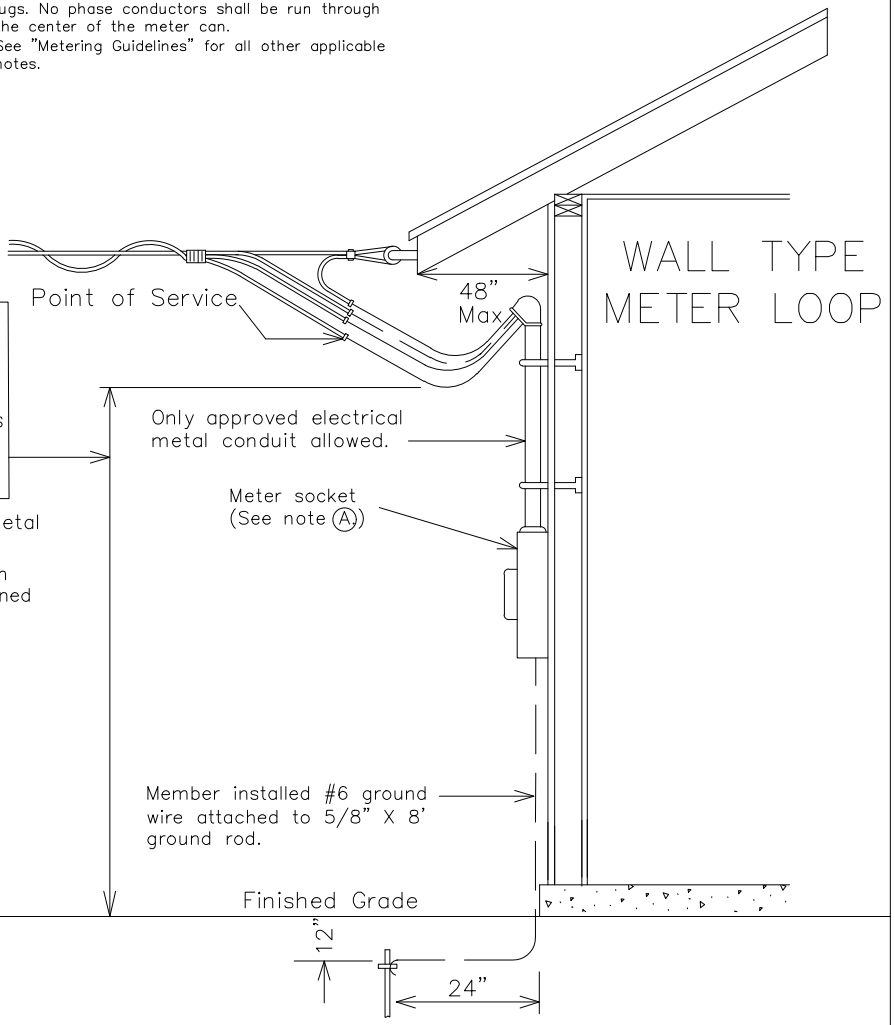

Bluebonnet	1Ø 400 AMP SERVICE WITH METER LOOP ON BUILDING – WALL TYPE	Drawn By : RG	Checked By : MS COMMITTEE	Approved By : MS COMMITTEE
	DATE / REVISIONS: 11-04-2021 Added Main Breaker Note	Scale : NONE	Date: 11-04-2021	MS-107WT

Notes:

1. Main disconnect panel may not be used as an electrical race way.
2. Line taps shall be made by the electrical contractor if a galvanized wiring trough is used.
3. Any combination of six disconnects totaling no more than 400 amp can be used. REF. NEC, SEC. 230.71
4. If more than two disconnects are needed a galvanized trough is required.
5. #6 solid, bare ground copper wire and clamp attached to Bluebonnet's pole ground
6. If secondary service exceeds 1–3" (or 2–2") galvanized metal conduit, BEC will install a primary underground transformer at member's expense.
7. All service wires entering the meter can (Top or Bottom Feed) will be terminated at the closest lugs. No phase conductors shall be run through the center of the meter can.
8. Only 400 amp meter cans are allowed. No 320 amp meter cans are allowed.
9. Member shall use a metal nipple.
10. Largest wire to be pulled in to the meter can is 500 MCM Copper.
11. All service wires entering the meter can (Top or Bottom Feed) will be terminated at the closest lugs. No phase conductors shall be run through the center of the meter can.
12. A detailed load sheet shall be filled out and returned to Bluebonnet before the service will be connected.
13. Maintain 3"–6" distance between the disconnect and the meter can. Member shall use a metal nipple. A straight or offset nipple is acceptable.
14. See "Metering Guidelines" for all other applicable notes.

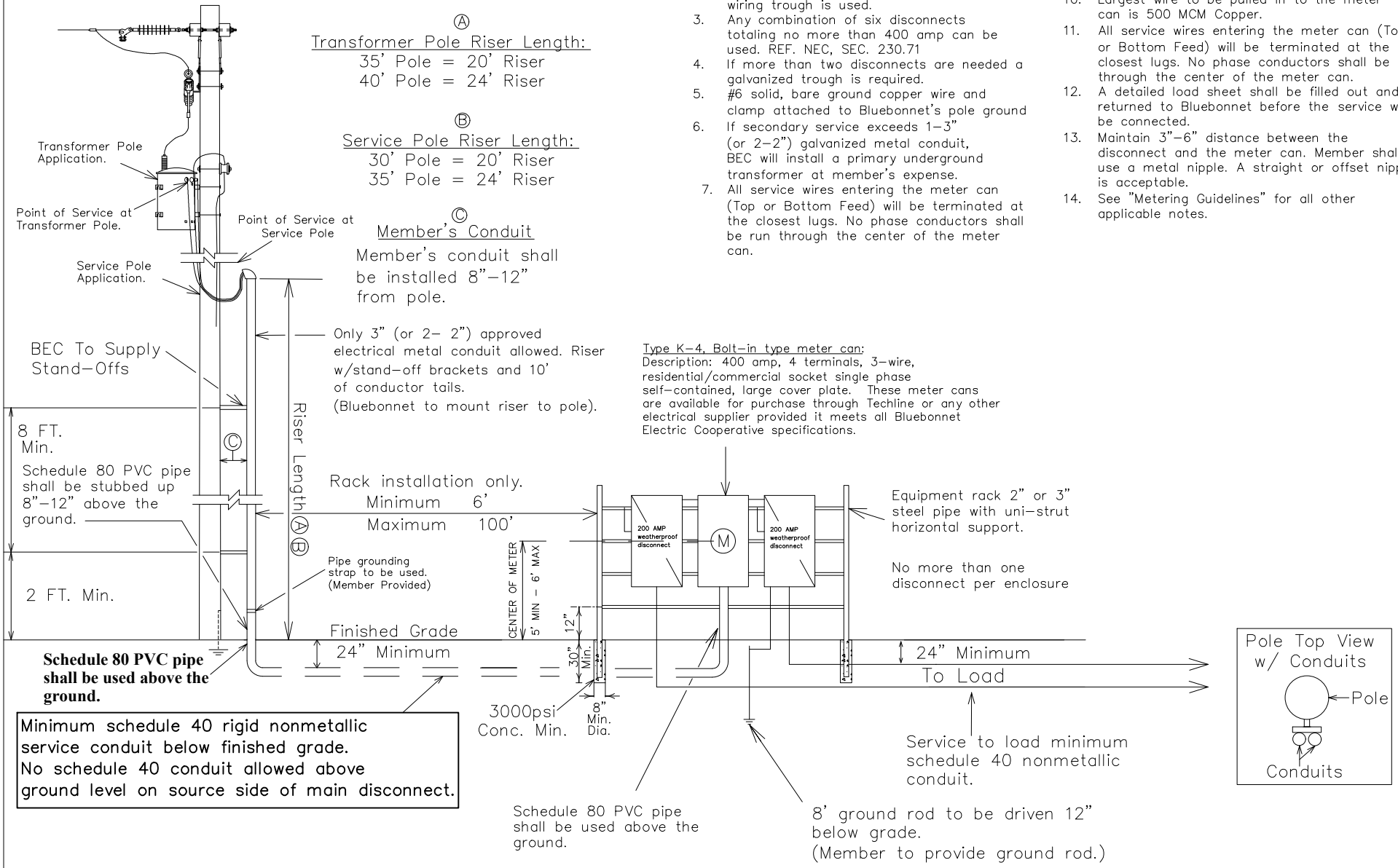

Ⓐ
Transformer Pole Riser Length:
35' Pole = 20' Riser
40' Pole = 24' Riser

Ⓑ
Service Pole Riser Length:
30' Pole = 20' Riser
35' Pole = 24' Riser

Ⓒ
Member's Conduit
Member's conduit shall be installed 8"–12" from pole.

Only 3" (or 2– 2") approved electrical metal conduit allowed. Riser w/stand–off brackets and 10' of conductor tails. (Bluebonnet to mount riser to pole).

Type K–4, Bolt–in type meter can:
Description: 400 amp, 4 terminals, 3–wire, residential/commercial socket single phase self–contained, large cover plate. These meter cans are available for purchase through Techline or any other electrical supplier provided it meets all Bluebonnet Electric Cooperative specifications.

Schedule 80 PVC pipe shall be used above the ground.

Minimum schedule 40 rigid nonmetallic service conduit below finished grade.
No schedule 40 conduit allowed above ground level on source side of main disconnect.

Bluebonnet	1Ø 400 AMP SERVICE ON METER RACK OR BUILDING WITH K BASE BOLTED IN METER SOCKET	Drawn By : RG	Checked By : MS COMMITTEE	Approved By : MS COMMITTEE
	DATE / REVISIONS	Scale : NONE	Date : 11–04–2021	MS–108
	11–19–2019 Added Solid Copper Note			
	11–04–2021 Added Main Breaker Note			

Notes:

1. When more than (1) disconnect is used, a galvanized trough system shall be installed.
2. Line taps shall be made in the galvanized wire trough by the electrical contractor. (See Article 310.10 (H) Per NEC).
3. (2) disconnects can be substituted with (1) disconnect. All disconnects shall have over current protection installed.
4. No more than (2) risers or (2) conductors per phase shall be allowed.
5. Bluebonnet to install meter can, meter and current transformers unless there will be multiple metering points from the trough. Contact the support service department on this type of installation.
6. Maintain 3"–6" distance between the disconnect and the meter can. Member shall use a metal nipple. A straight or offset nipple is acceptable.
7. #6 solid, bare ground copper wire and clamp attached to Bluebonnet's pole ground
8. Total disconnect's will not exceed a total of 800 amps.
9. See "Metering Guidelines" for all other applicable notes.

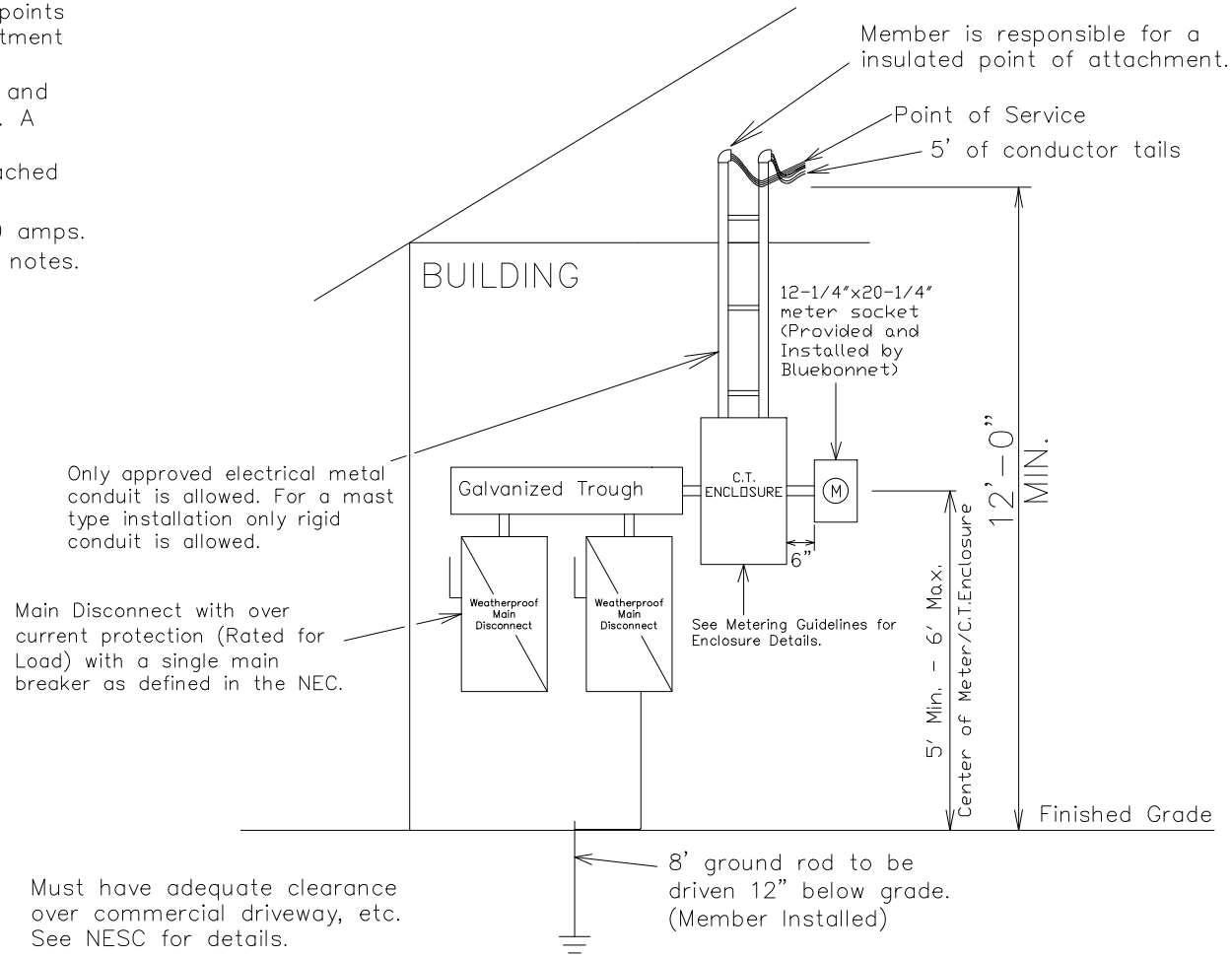

Bluebonnet

1 PHASE >400–600 AMP SERVICE ON BUILDING WITH CT METERING ON BUILDING OR RACK		Drawn By : RG	Checked By : MS COMMITTEE	Approved By : MS COMMITTEE
DATE	REVISIONS	Scale : NONE	Date : 11–04–2021	MS–112B1
11–19–2019	Added #6 copper note.			
11–04–2021	Added Main Breaker Note			

Notes:

1. When more than (1) disconnect is used, a galvanized trough system shall be installed.
2. Line taps shall be made in the galvanized wire trough by the electrical contractor. (See Article 310.10 (H) Per NEC).
3. (2) disconnects can be substituted with (1) disconnect. All disconnects shall have over current protection installed.
4. No more than (2) risers or (2) conductors per phase shall be allowed.
5. Bluebonnet to install meter can, meter and current transformers unless there will be multiple metering points from the trough. Contact the support service department on this type of installation.
6. Maintain 3"–6" distance between the disconnect and the meter can. Member shall use a metal nipple. A straight or offset nipple is acceptable.
7. #6 solid, bare ground copper wire and clamp attached to Bluebonnet's pole ground.
8. Total disconnect's will not exceed a total of 800 amps.
9. See "Metering Guidelines" for all other applicable notes.

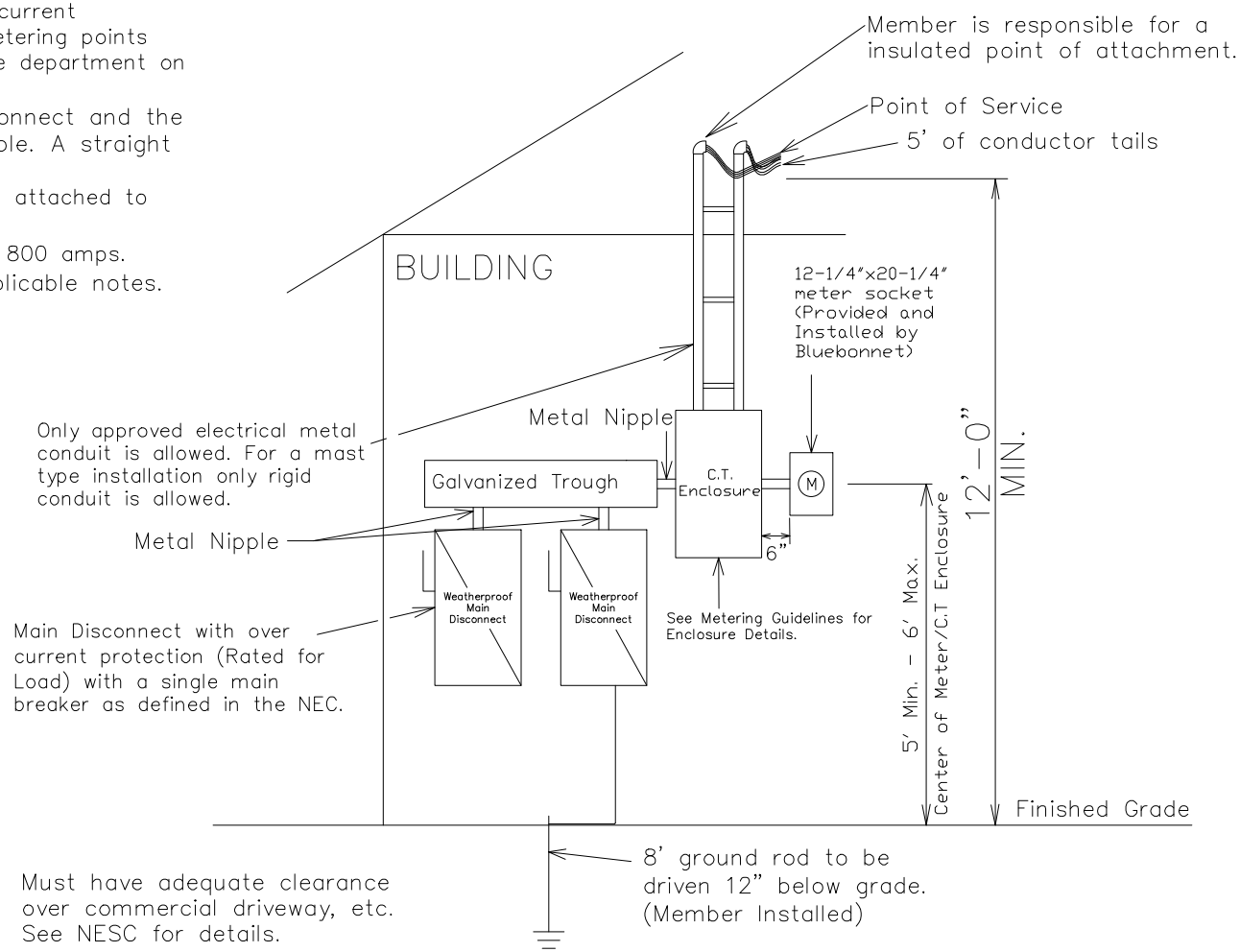

Bluebonnet

3 PHASE >200–600 AMP SERVICE ON BUILDING WITH CT METERING ON BUILDING OR RACK

DATE	REVISIONS
11–19–2019	Added solid copper note.
04–16–2021	Removed Single phase from CT enclosure note.
11–04–2021	Added Main Breaker Note

Drawn By :	Checked By :	Approved By :
RG	MS COMMITTEE	MS COMMITTEE
Scale : NONE	Date : 11–4–2021	MS–112B3

Notes:

1. Line taps shall be made in the galvanized wire trough by the electrical contractor.
2. When more than (1) disconnect is used, a galvanized trough system shall be installed.
3. Two (2) disconnects could be substituted with (1) disconnect. All disconnects shall have over current protection installed.
5. No more than two (2) risers or two (2) conductors per phase shall be allowed.
6. Wire shall be sized to total disconnect sizes.
7. Maintain 3"–6" distance between the disconnect and the meter can. Member shall use a metal nipple. A straight or offset nipple is acceptable.
8. #6 solid, bare ground copper wire and clamp attached to Bluebonnet's pole ground.
9. See "Metering Guidelines" for all other applicable notes.

Ⓐ
Transformer Pole Riser Length:
35' Pole = 20' Riser
40' Pole = 24' Riser

Ⓑ
Service Pole Riser Length:
30' Pole = 20' Riser
35' Pole = 24' Riser

Ⓒ
Member's Conduit
Member's conduit shall be installed 8"–12" from pole

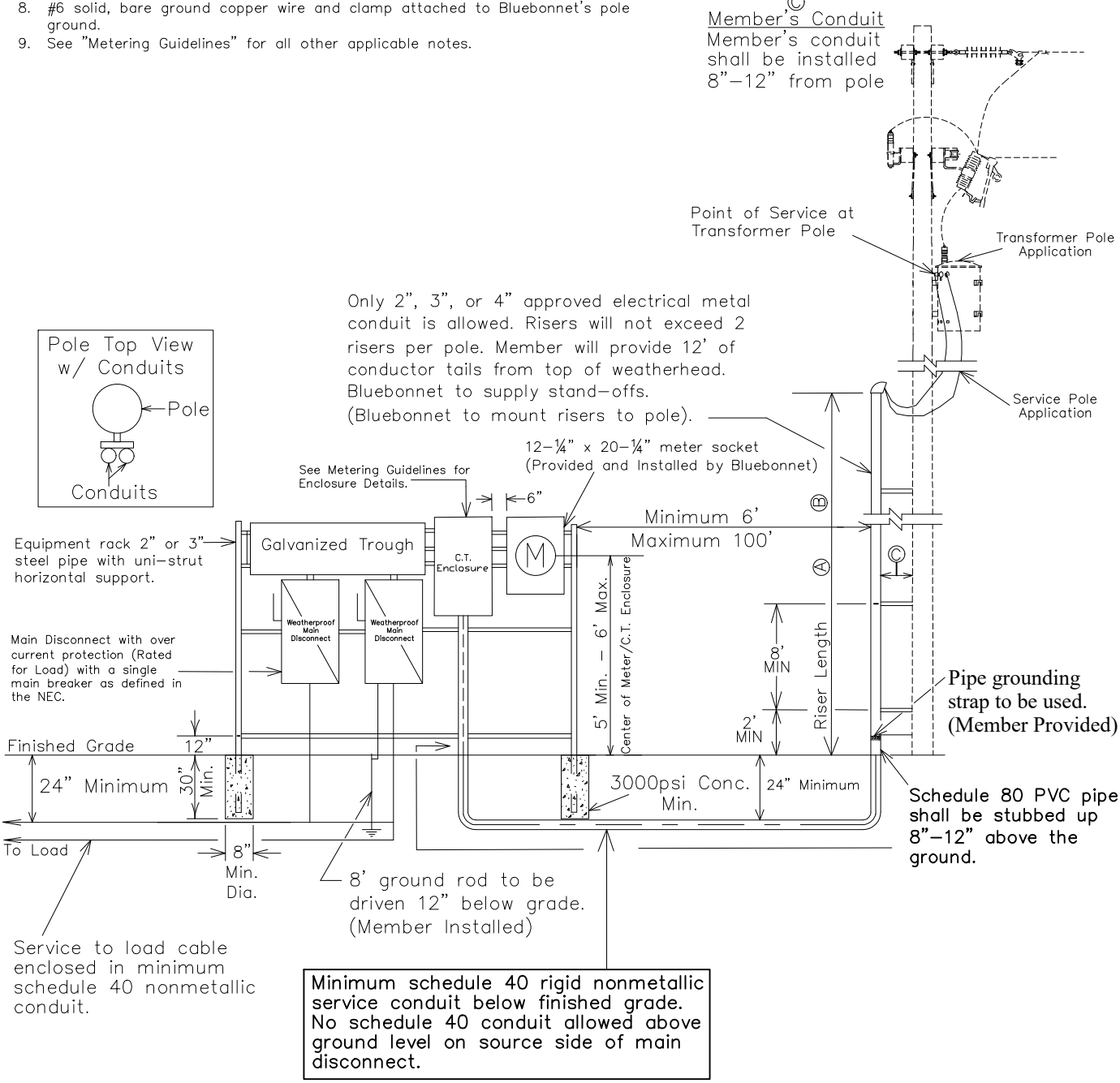

1 PHASE >400–800 AMP SERVICE WITH CT METERING ON RACK

Bluebonnet

DATE	REVISIONS
11–28–2017	Bold lettering of schedule 80 PVC
11–19–2019	Added Solid Copper Note.
04–16–2021	Changed the size of the CT Meter Can requirements.
11–04–2021	Added Main Breaker Note

Drawn By :	Checked By :	Approved By :
RG	MS COMMITTEE	MS COMMITTEE
Scale : NONE	DATE: 11–04–2021	MS–113B1

Notes:

1. Line taps shall be made in the galvanized wire trough by the electrical contractor.
2. When more than (1) disconnect is used, a galvanized rough system hall be installed.
3. Two (2) disconnects could be substituted with (1) disconnect. All disconnects shall have over current protection installed.
4. No more than two (2) risers or two (2) conductors per phase shall be allowed.
5. Maintain 3"–6" distance between the disconnect and the meter can.
6. Member shall use a metal nipple. A straight or offset nipple is acceptable.
7. #6 solid, bare ground copper wire and clamp attached to Bluebonnet's pole ground.
8. See "Metering Guidelines" for all other applicable notes.

Ⓐ
Transformer Pole Riser Length:
35' Pole = 20' Riser
40' Pole = 24' Riser

Ⓑ
Service Pole Riser Length:
30' Pole = 20' Riser
35' Pole = 24' Riser

Ⓒ
Member's Conduit
Member's conduit shall be installed 8"–12" from pole

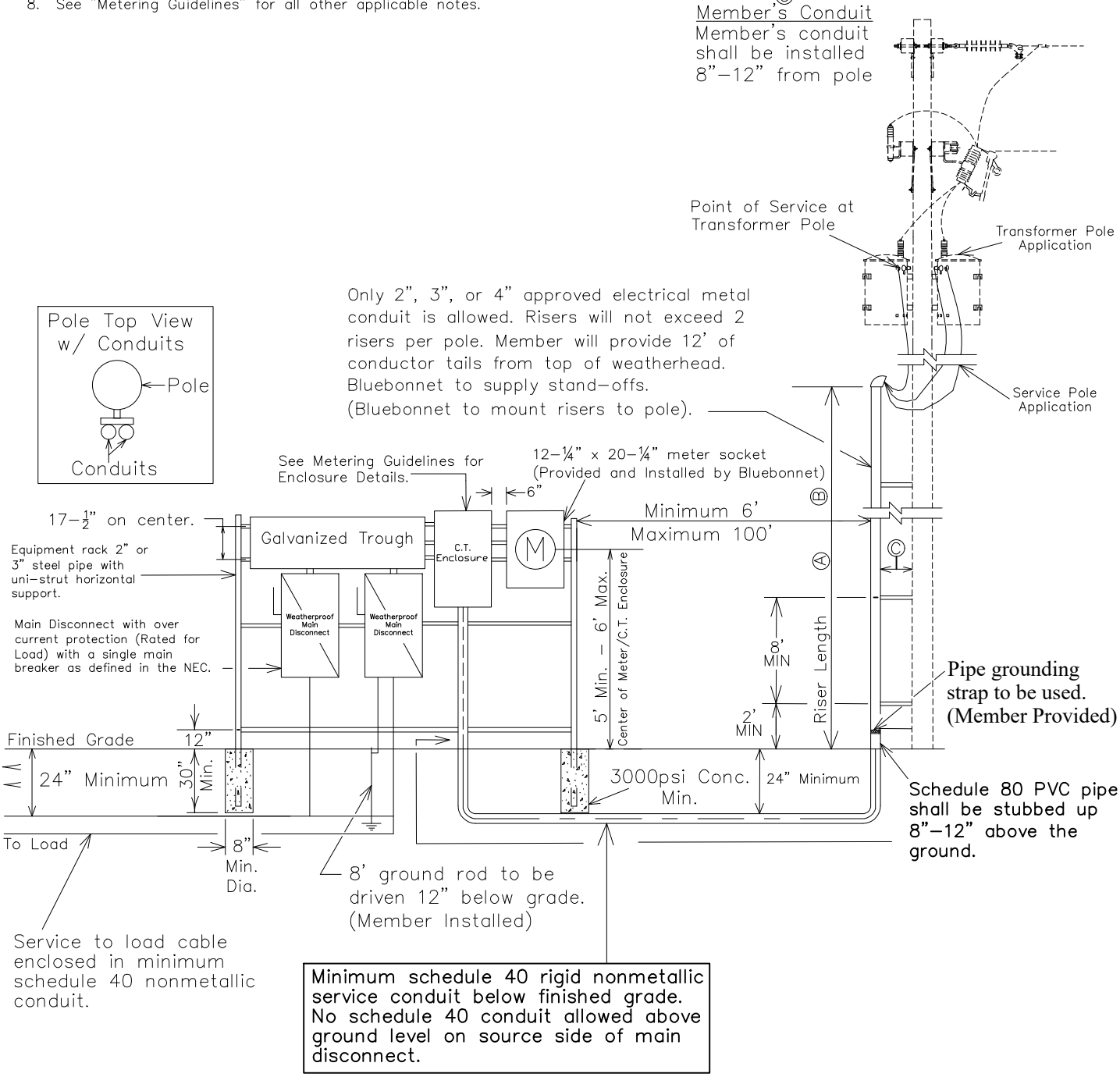

3 PHASE >200–800 AMP SERVICE WITH CT METERING ON RACK

Bluebonnet

DATE	REVISIONS
11–28–2017	Bold lettering of schedule 80 PVC
11–19–2019	Added Solid Copper Note.
04–16–2021	Removed Single Phase from the CT Enclosure Note.
11–04–2021	Added Main Breaker Note

Drawn By :	Checked By :	Approved By :
RG	MS COMMITTEE	MS COMMITTEE
Scale : NONE	DATE: 11–04–2021	MS–113B3

Notes:

1. Line taps shall be made in the galvanized wiring trough by the electrical contractor.
2. (2) disconnects could be substituted with (1) disconnect. All disconnects shall have over current protection installed.
3. No more than (2) risers or (2) conductors per phase shall be allowed.
4. More than (6) main disconnects require a properly sized main disconnect ahead of the galvanized trough.
5. Type K-4, Bolt-in type meter can: Description: 400 amp, 4 terminals, 3-wire, residential/commercial socket single phase self-contained, large cover plate. These meter cans are available for purchase through Techline or any other electrical supplier provided it meets all Bluebonnet Electric Cooperative specifications.
6. Maintain 3"-6" distance from the disconnect and the meter can. Member shall use a metal nipple.
7. See "Metering Guidelines" for all other applicable notes.

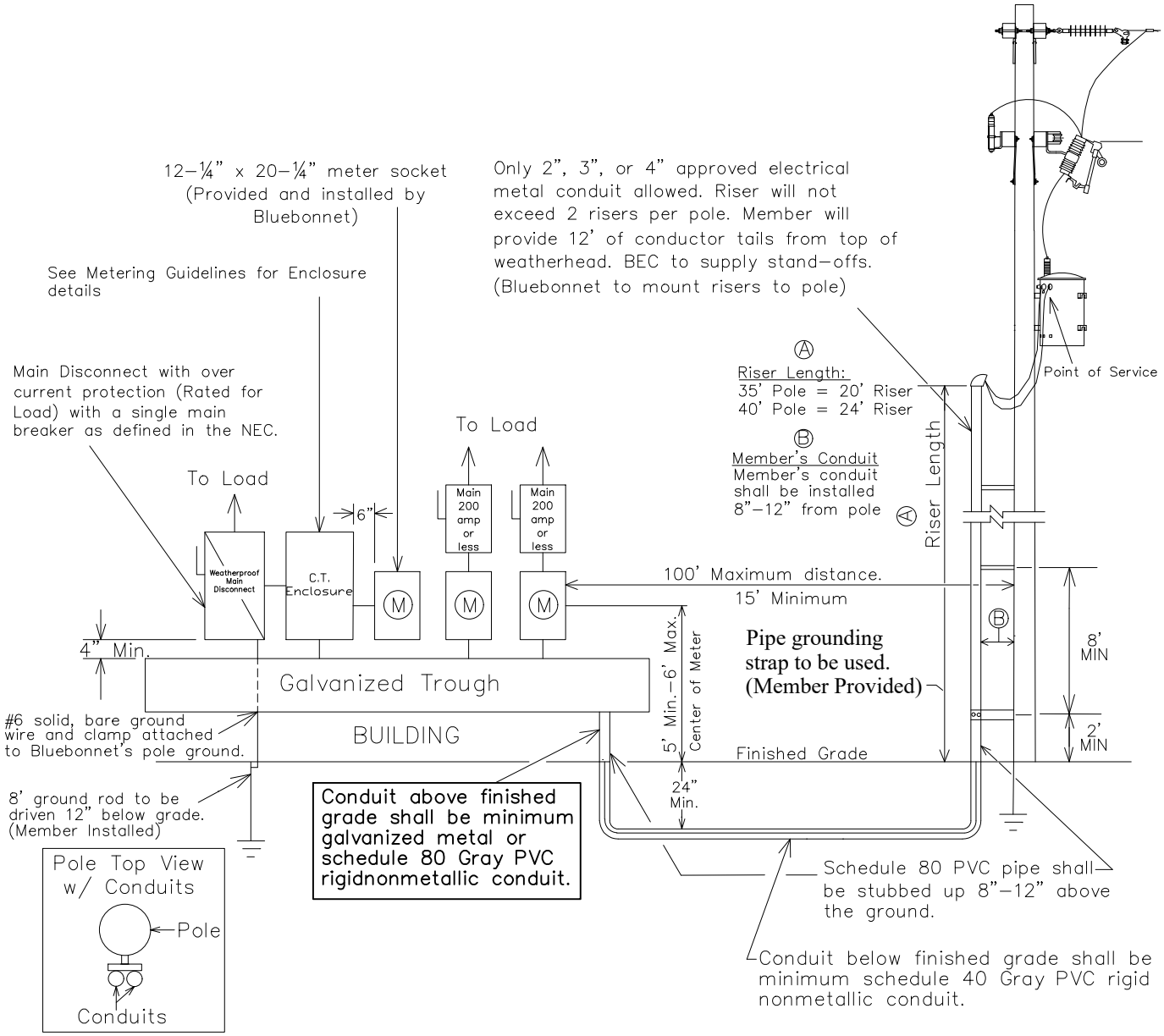

1Ø 400-800 TOTAL AMPS WITH MULTIPLE METERING POINTS ON BUILDING. (RISER TYPE)

Bluebonnet

DATE	REVISIONS
11-28-2017	Bold lettering of Pipe grounding Strap
11-19-2019	Added Solid Copper Note.
04-19-2021	Changed the size of the CT Meter Can requirements.
11-04-2021	Added Main Breaker Note

Drawn By :	Checked By :	Approved By :
RG	MS COMMITTEE	MS COMMITTEE
Scale : NONE	Date : 11-04-2021	MS-114A1

Notes:

1. Line taps shall be made in the galvanized wiring trough by the electrical contractor.
2. (2) disconnects could be substituted with (1) disconnect. All disconnects shall have over current protection installed.
3. No more than (2) risers or (2) conductors per phase shall be allowed.
4. More than (6) main disconnects require a properly sized main disconnect ahead of the galvanized trough
5. Type K-4, Bolt-in type meter can: Description: 400 amp, 4 terminals, 3-wire, residential/commercial socket single phase self-contained, large cover plate. These meter cans are available for purchase through Techline or any other electrical supplier provided it meets all Bluebonnet Electric Cooperative specifications.
6. Maintain 3"-6" distance from the disconnect and the meter can. Member shall use a metal nipple. A straight or offset nipple is acceptable.
7. No more than one disconnect per enclosure.
8. See "Metering Guidelines" for all other applicable notes.

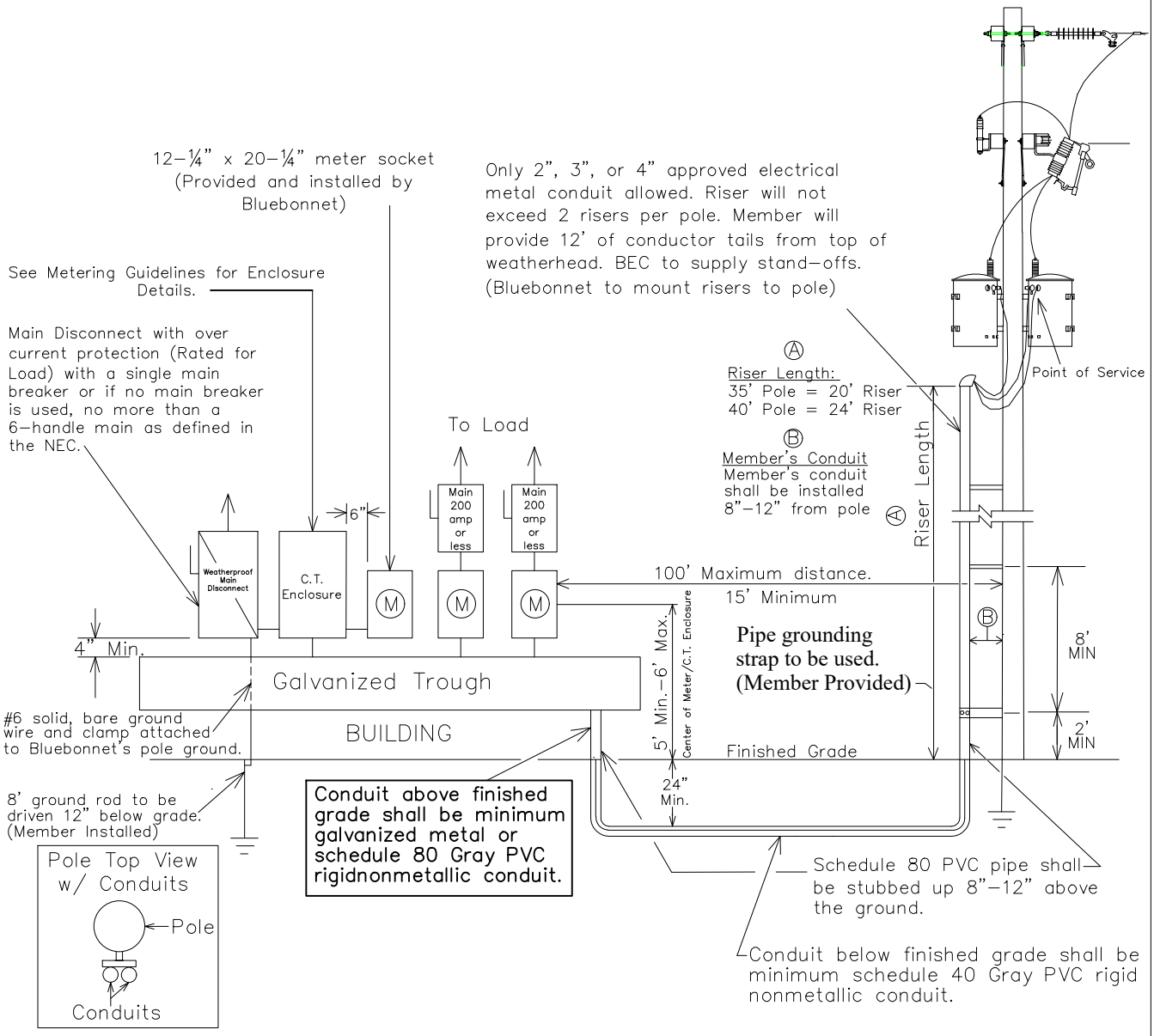

3 PHASE 200-800 TOTAL AMPS WITH MULTIPLE METERING POINTS ON BUILDING. (RISER TYPE)

Bluebonnet

DATE	REVISIONS
11-28-2017	Bold lettering of pipe grounding strap
11-19-2019	Added Solid Copper Note.
04-19-2021	Removed Single Phase from the CT Enclosure Note.
11-04-2021	Added Main Breaker Note

Drawn By :	Checked By :	Approved By :
RG	MS COMMITTEE	MS COMMITTEE
Scale : NONE	Date : 11-04-2021	MS-114B3

Notes:

1. When more than (1) disconnect is used, a galvanized trough system shall be installed.
2. Line taps shall be made in the galvanized wire trough by the electrical contractor.
3. (2) disconnects can be substituted with (1) fused disconnect.
4. No more than (2) risers or (2) conductors per phase shall be allowed.
5. Total disconnet's will not exceed a total of 800 amps.
6. Gutter can be mounted on top or bottom of meters as long as the center of the meter distance in 5'–6".
7. Maintain 3"–6" distance between the disconnect and the meter can. Member shall use a metal nipple. A straight or offset nipple is acceptable.
8. #6 solid, bare ground copper wire and clamp attached to Bluebonnet's pole ground.
9. No more than one disconnect per enclosure.
10. Type K–4, Bolt–in type meter can:
    Description: 400 amp, 4 terminals, 3–wire, residential/commercial socket singlephase self–contained, large coverplate. These meter cans are available for purchase through Techline or any other electrical supplier provided it meets all Bluebonnet Electric Cooperative specifications.
11. See "Metering Guidelines" for all other applicable notes.

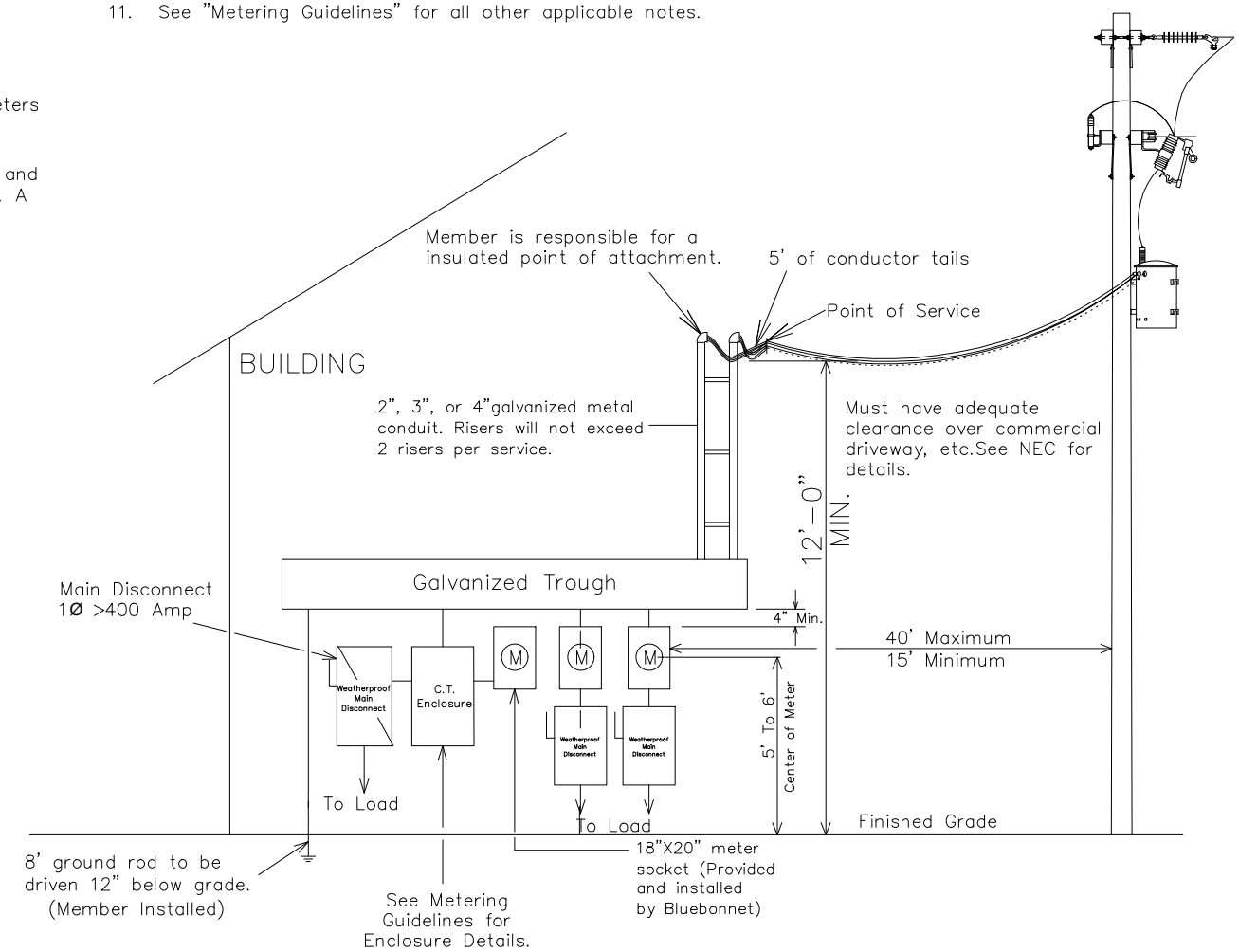

Bluebonnet	1Ø 400–800 TOTAL AMP WITH MULTIPLE METERING POINTS ON BUILDING. SERVICE TYPE	Drawn By : SF	Checked By : MS COMMITTEE	Approved By : MS COMMITTEE
	DATE / REVISIONS 04–19–2021 Changed the size of the CT Meter Can requirements. 11–04–2021 Added Main Breaker Note	Scale : NONE	Date : 11–04–2021	MS–115–1

Notes:

1. When more than (1) disconnect is used, a galvanized trough system shall be installed.
2. Line taps shall be made in the galvanized wire trough by the electrical contractor.
3. (2) disconnects can be substituted with (1) fused disconnect.
4. No more than (2) risers or (2) conductors per phase shall be allowed.
5. Total disconnect's will not exceed a total of 800 amps.
6. Gutter can be mounted on top or bottom of meters as long as the center of the meter distance in 5'–6".
7. Maintain 3"–6" distance between the disconnect and the meter can. Member shall use a metal nipple. A straight or offset nipple is acceptable.
8. #6 solid, bare ground copper wire and clamp attached to Bluebonnet's pole ground.
9. No more then one Disconnect per enclosure.
10. Type K–4, Bolt–in type meter can:
    Description: 400 amp, 4 terminals, 3–wire, residential/commercial socket singlephase self–contained, large coverplate. These meter cans are available for purchase through Techline or any other electrical supplier provided it meets all Bluebonnet Electric Cooperative specifications.
11. See "Metering Guidelines" for all other applicable notes.

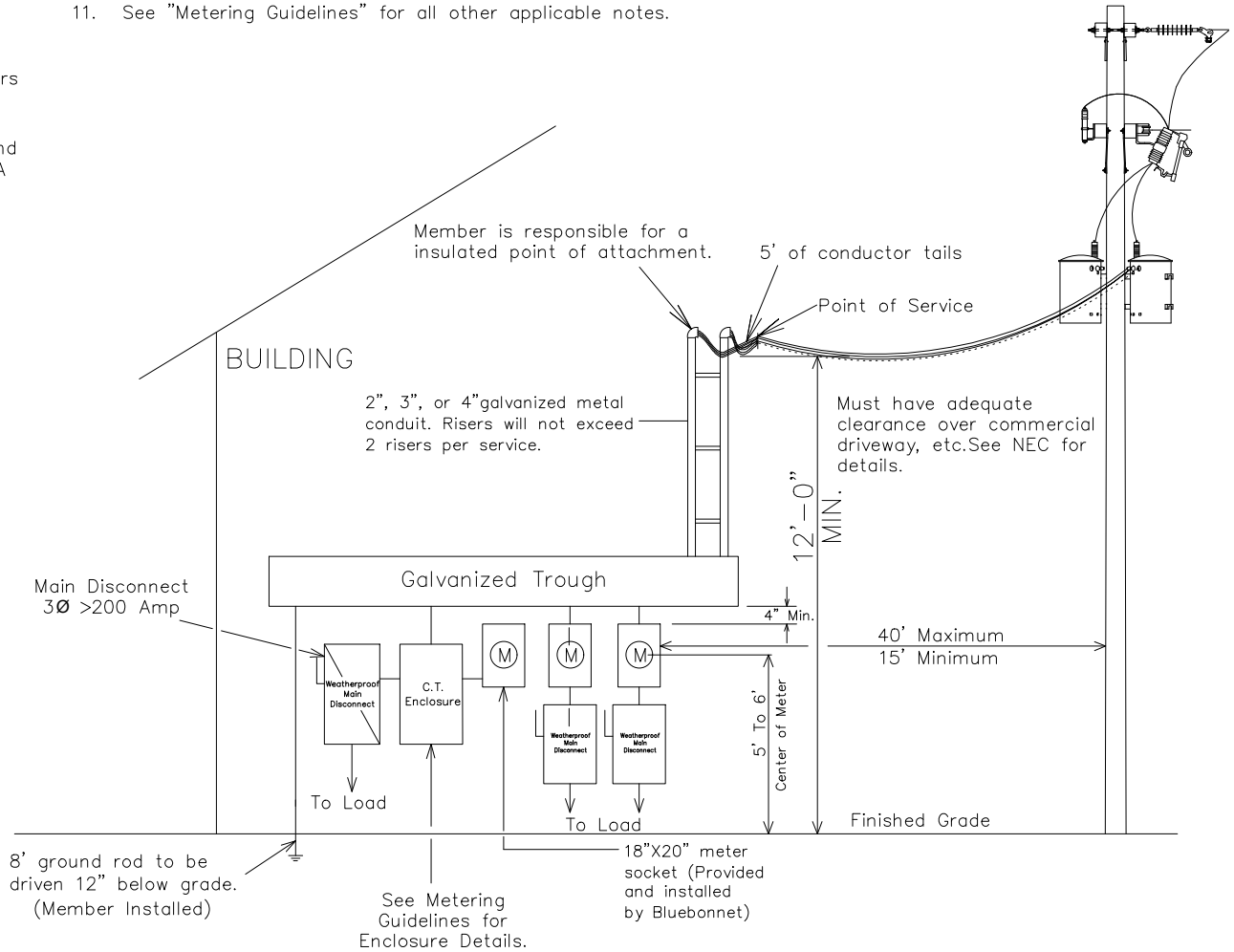

Bluebonnet	3Ø 200–800 TOTAL AMP WITH MULTIPLE METERING POINTS ON BUILDING. SERVICE TYPE	Drawn By : SD	Checked By : MS COMMITTEE	Approved By : MS COMMITTEE
	DATE / REVISIONS 04–19–2021 Removed Single Phase from the CT Enclosure Note. 11–04–2021 Added Main Breaker Note	Scale : NONE	Date : 11–04–2021	MS–115–3

CURRENT CARRYING CAPACITIES AND CONDUIT/NIPPLE SIZE REQUIREMENT OF STANDARD WIRE SIZE.
(RHH, RHW, THW, THWN, THHN, AND XHHW)
REFER TO NEC FOR OTHER CALCULATIONS.

COPPER CONDUCTOR

WIRE SIZE	BREAKER SIZE	CONDUIT/NIPPLE SIZE
#6	60 AMP	1¼" CONDUIT
#4	100 AMP	1¼" CONDUIT
#2	125 AMP	1½" CONDUIT
#1	150 AMP	2" CONDUIT
#2/0	200 AMP	2" CONDUIT

ALUMINUM CONDUCTOR

WIRE SIZE	BREAKER SIZE	CONDUIT/NIPPLE SIZE
#4	60 AMP	1¼" CONDUIT
#2	100 AMP	1¼" CONDUIT
#1/0	125 AMP	1½" CONDUIT
#2/0	150 AMP	2" CONDUIT
#4/0	200 AMP	2" CONDUIT

Single Phase Transformer Layout

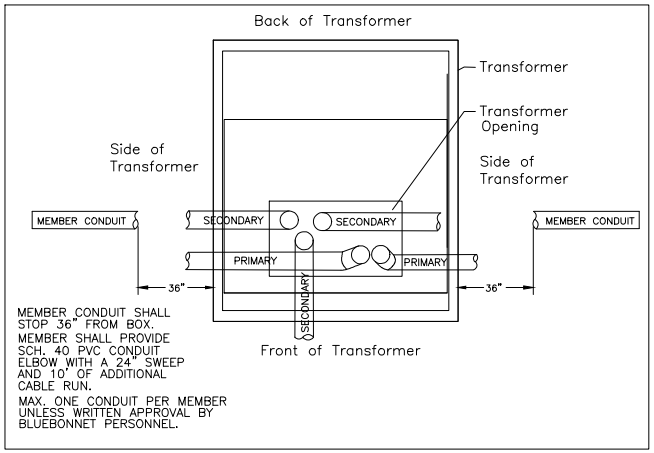

Notes:

1. Members shall install an additional 10' of wire for termination.
2. Main disconnect shall have a single main breaker as defined in the NEC.
3. All connections inside pad mounted transformer and UJB's will be made by Bluebonnet.
4. THREE PHASE APPLICATIONS ONLY DESCRIPTION:
   200amp, 7 terminal, 3-phase, 4-wire will require a lever by-pass meeting ANSI C12.7, UL 414, and NEMA 3R. Meter cans are available for purchase through Techline or any other electrical supplier provided it meets all Bluebonnet Electric Cooperative specifications.
5. Member must contact Bluebonnet to determine where the secondary conduit is to be run to the transformer. Conduit to be installed 36" to the side of transformer. Call 800-842-7708 to schedule an appointment.
6. Member/Electrician shall coordinate with Bluebonnet personal to install all conduit and the pulling of the secondary wire to the transformer. Member/Electrician shall notify Bluebonnet 48 hours in advance to schedule a time/date to perform the work.
7. If additional trips are made to the site by Bluebonnet personnel, applicable fees maybe applied.
8. See "Metering Guidelines" for other applicable notes.

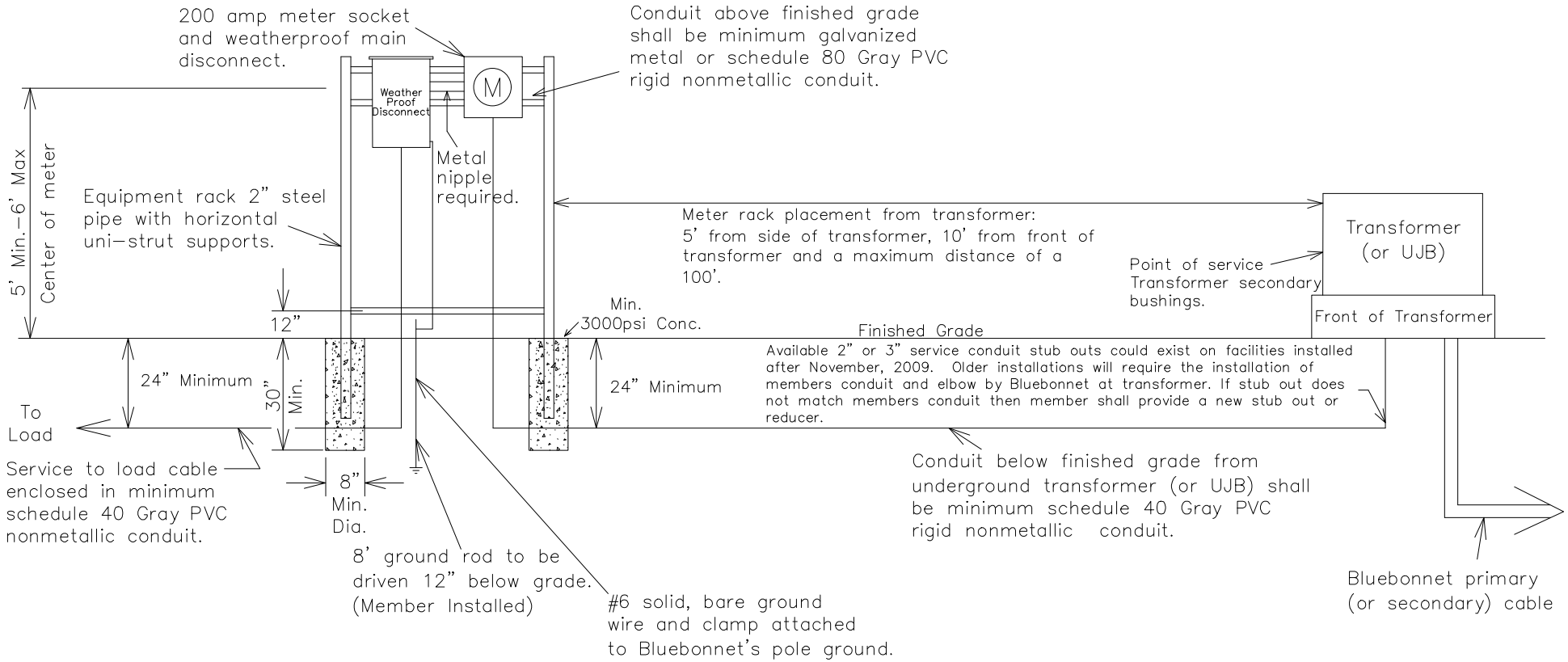

Bluebonnet

1Ø OR 3Ø, 60-200 AMP UNDERGROUND SERVICE ON RACK OR BUILDING		Drawn By : CV	Checked By : MS COMMITTEE	Approved By : MS COMMITTEE
DATE	REVISIONS	Scale : NONE	Date : 11-04-2021	MS-201
11-19-2019	ADDED SOLID COPPER NOTE.			
11-04-2021	ADDED MAIN BREAKER NOTE.			

Notes:

1. Line taps shall be made in the galvanized wiring trough by the electrical contractor.
2. Cooperative will complete wiring into transformer. Have an additional 10' of wire for termination.
3. More than (6) main disconnects require a properly sized main disconnect ahead of the galvanized trough.
4. All connections inside pad mounted transformer will be made by Bluebonnet.
5. THREE PHASE APPLICATIONS ONLY DESCRIPTION:
   200amp, 7 terminal, 3-phase, 4-wire will require a lever by-pass meeting ANSI C12.7, UL 414, and NEMA 3R. Meter cans are available for purchase through Techline or any other electrical supplier provided it meets all Bluebonnet Electric Cooperative specifications. Techline (512-332-2978).
6. Member/Electrician shall coordinate with Bluebonnet personal to install all conduit and the pulling of the secondary wire to the transformer. Member/Electrician shall notify Bluebonnet 48 hours in advance to schedule a time/date to perform the work. be applied.
7. If additional trips are made to the site by Bluebonnet personnel, applicable fees may be applied.
8. Maintain 3"-6" distance between the disconnect and the meter can. Member shall use a metal nipple. A straight or offset nipple is acceptable.
9. See "Metering Guidelines" for other applicable notes.

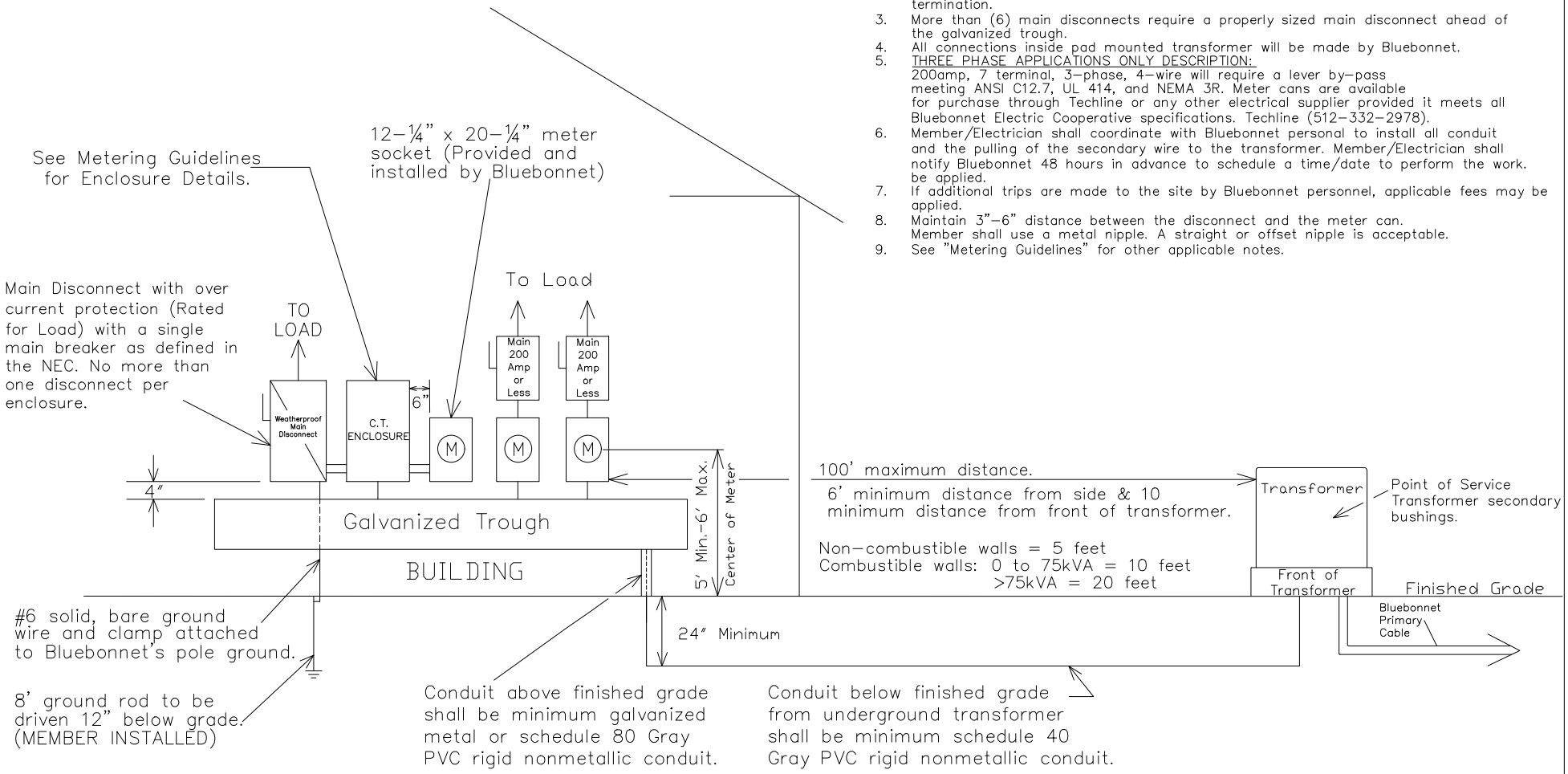

Bluebonnet

1 PHASE >400 AMP UNDERGROUND WITH MULTIPLE METERING POINTS AND CT METERING ON BUILDING.

DATE	REVISIONS
04-19-2021	Changed the size of the CT Meter Can requirements.
11-04-2021	Added Main Breaker Note

Drawn By :	Checked By :	Approved By :
RG	MS COMMITTEE	MS COMMITTEE
Scale : NONE	Date : 11-04-2021	MS-202A1

Notes:

1. Line taps shall be made in the galvanized wiring trough by the electrical contractor.
2. Cooperative will complete wiring into transformer. Have an additional 10' of wire for termination.
3. More than (6) main disconnects require a properly sized main disconnect ahead of the galvanized trough.
4. All connections inside pad mounted transformer will be made by Bluebonnet.
5. THREE PHASE APPLICATIONS ONLY DESCRIPTION:
   200amp, 7 terminal, 3-phase, 4-wire will require a lever by-pass meeting ANSI C12.7, UL 414, and NEMA 3R. Meter cans are available for purchase through Techline or any other electrical supplier provided it meets all Bluebonnet Electric Cooperative specifications.
6. Member/Electrician shall coordinate with Bluebonnet personal to install all conduit and the pulling of the secondary wire to the transformer. Member/Electrician shall notify Bluebonnet 48 hours in advance to schedule a time/date to perform the work.
7. If additional trips are made to the site by Bluebonnet personnel, applicable fees may be applied.
8. Maintain 3"-6" distance between the disconnect and the meter can. Member shall use a metal nipple. A straight or offset nipple is acceptable.
9. See "Metering Guidelines" for other applicable notes.

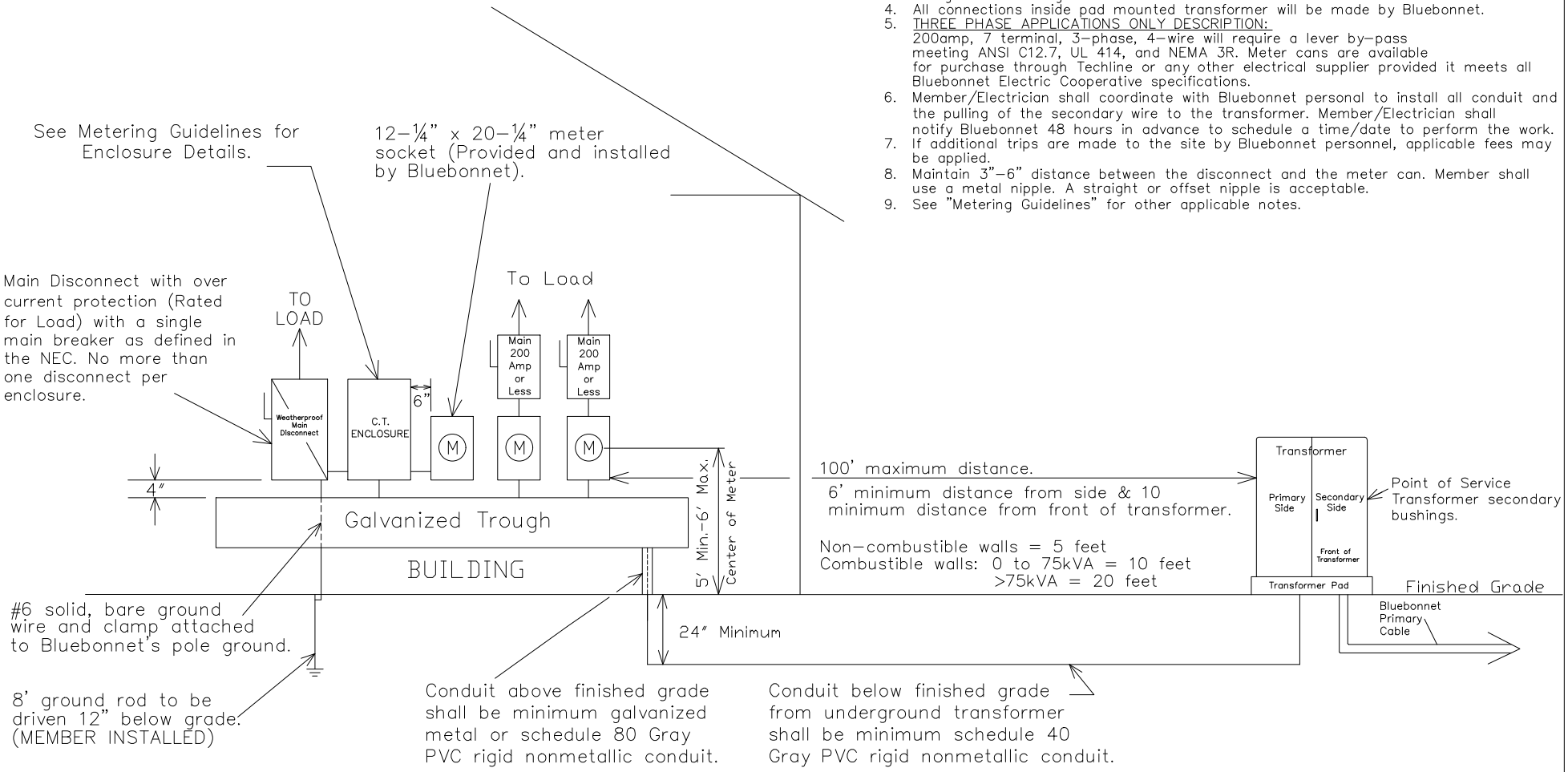

Bluebonnet	3 PHASE >200 AMP UNDERGROUND WITH MULTIPLE METERING POINTS AND CT METERING ON BUILDING.	Drawn By : RG	Checked By : MS COMMITTEE	Approved By : MS COMMITTEE
	DATE / REVISIONS	Scale : NONE	Date : 11-04-2021	MS-202B3
	04-19-2021 Removed Single Phase from the CT Enclosure Note.			
	11-04-2021 Added Main Breaker Note			

Notes:

1. Main disconnect panel may not be used as a electrical race way.
2. Line taps shall be made by the electrical contractor if a galvanized wiring trough is used.
3. Any combination of six disconnects totaling no more than 400 amps can be used. REF. NEC, SEC 230.71
4. Recommended wire size is either parallel 2/0 THHN copper or parallel 4/0 THHN aluminum.
5. Member shall install an additional of 10' wire for termination.
6. Weatherproof main disconnect panels shall have a single main breaker or 6-handle main as defined in the NEC.
7. Metering point must remain unenclosed on exterior of structure.
8. All secondary connections in transformer are made by Bluebonnet.
9. Only 400 Amps meter cans are allowed. No 320 Amp Meter Cans are allowed.
10. All service wires entering the meter can (Top or Bottom Feed) will be terminated at the closest lugs. No phase conductors shall be run through the center of the meter can.
11. Member must contact Bluebonnet to determine where the secondary conduit is to be run to the transformer. Conduit to be installed 36" to the side of transformer. Call 800-842-7708 to schedule an appointment.
12. Member/Electrician shall coordinate with Bluebonnet personal to install all conduit and the pulling of the secondary wire to the transformer. Member/Electrician shall notify Bluebonnet 48 hours in advance to schedule a time/date to perform the work.
13. If additional trips are made to the site by Bluebonnet personnel, applicable fees maybe applied.
14. Maintain 3"-6" distance between the disconnect and the meter can. Member shall use a metal nipple. A straight or offset nipple is acceptable.
15. Largest wire to be pulled in to the meter can is 500 MCM Cooper.
16. A detailed load sheet shall be filled out and returned to Bluebonnet before the service will be connected.
17. #6 solid, bare ground copper wire and clamp to Bluebonnet's pole ground.
18. See "Metering Guidelines" for other applicable notes.

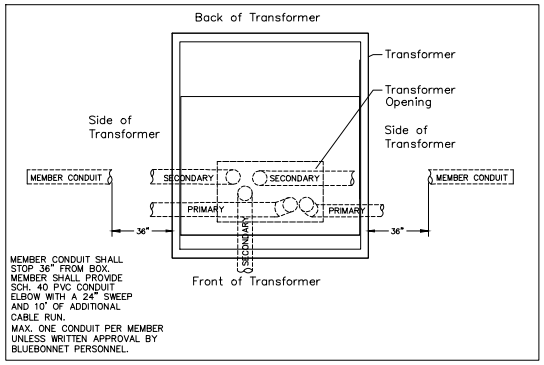

Single Phase Transformer Layout

Landis & Gyr, Type K-4, Description: 400 amp, 4 terminals, 3 wire, residential/commercial socket single phase self-contained, large coverplate. The meter lugs can accommodate up to 500 MCM. These meter cans are available for purchase through Techline or any other electrical supplier provided it meets all Bluebonnet Electric Cooperative specifications.

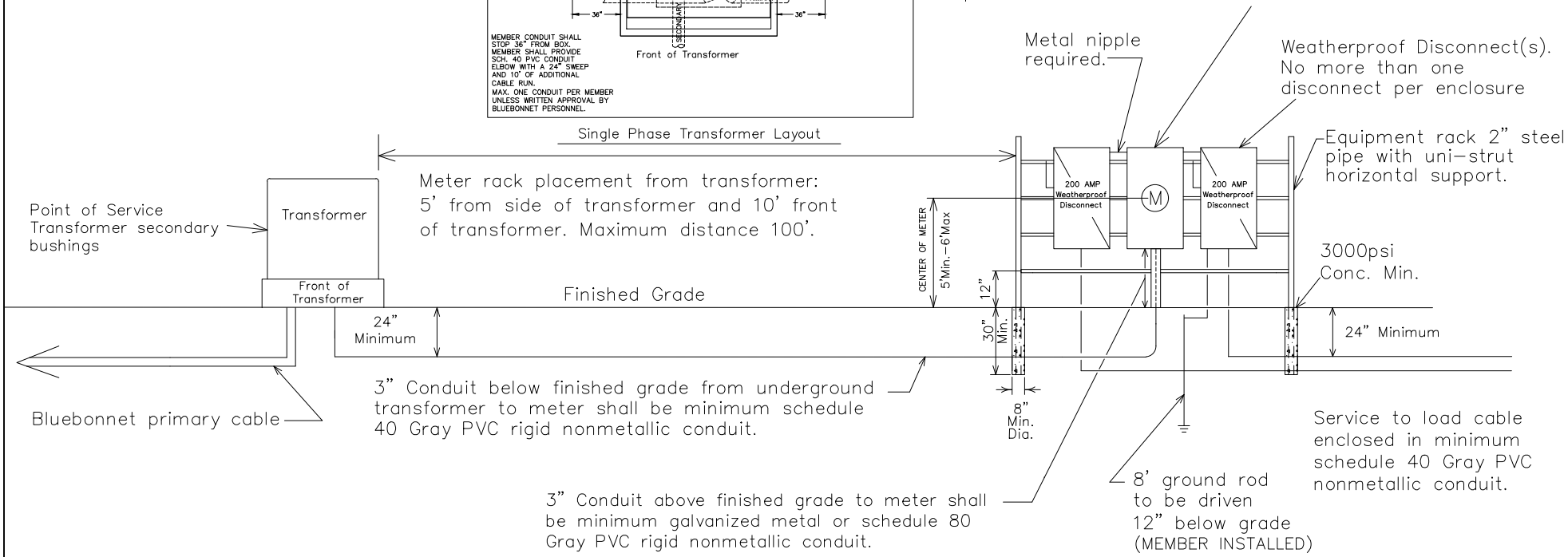

Bluebonnet

1Ø 400 AMP URD SERVICE ON RACK OR BUILDING WITH K BASE BOLTED IN METER SOCKET

DATE	REVISIONS
11-20-19	Added Solid Copper Note.
11-04-21	Added Main Breaker Note

Drawn By :	Checked By :	Approved By :
RG	MS COMMITTEE	MS COMMITTEE
Scale : NONE	Date : 11-04-2021	MS-203

Notes:

1. Line taps shall be made in the galvanized trough by the electrical contractor.
2. Two disconnects could be substituted with (1) disconnect. All disconnects shall have over current protection.
3. Member shall contact Bluebonnet Electric to determine the secondary conduit location. Conduit to be installed 36" to the side of transformer. Call 800-842-7708 to schedule an appointment.
4. Bluebonnet will complete wiring into transformer. Have sufficient amount of wire for termination. Member shall install an additional 10' of wire for termination
5. Member/Electrician shall coordinate with Bluebonnet personal to install all conduit and the pulling of the secondary wire to the transformer. Member/Electrician shall notify Bluebonnet 48 hours in advance to schedule a time/date to perform the work.
6. If additional trips are made to the site by Bluebonnet personnel, applicable fees may be applied.
7. Maintain 3"-6" distance between the disconnect and the meter can. Member shall use a metal nipple. A straight or offset nipple is acceptable.
8. See "Metering Guidelines" for other applicable notes.

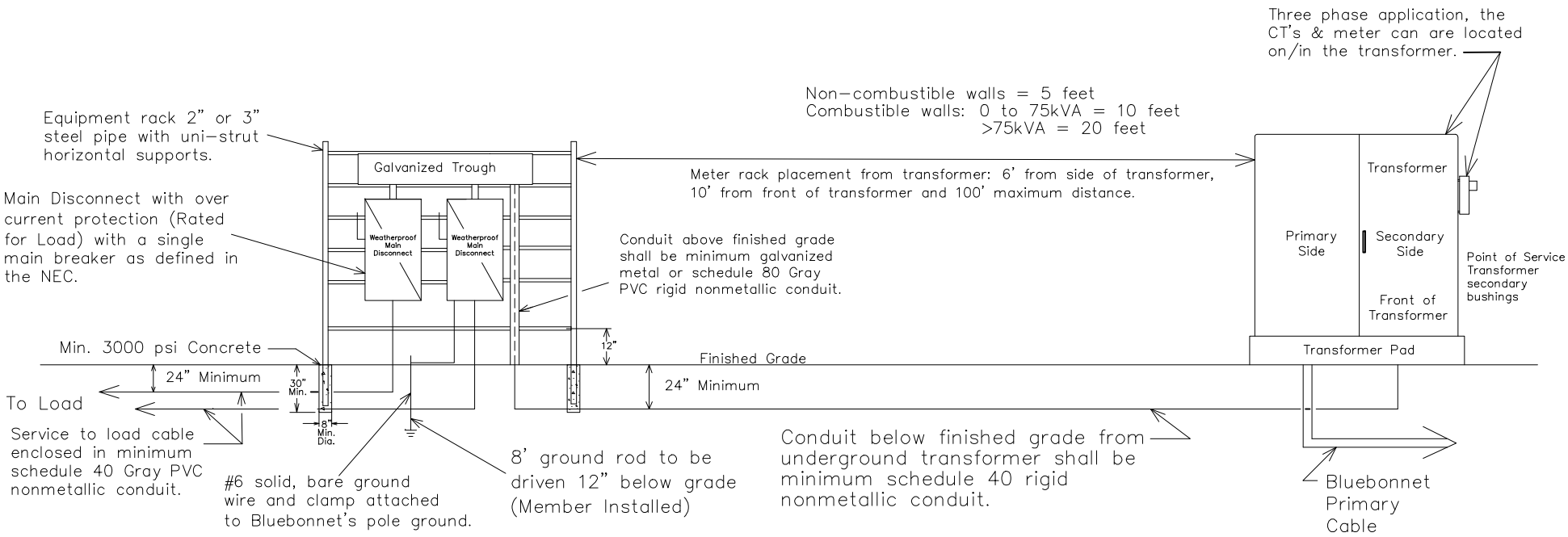

Bluebonnet	3 PHASE >200 AMP UNDERGROUND SERVICE WITH DISCONNECT ON RACK OR BUILDING	Drawn By : RG	Checked By : MS COMMITTEE	Approved By : MS COMMITTEE
	DATE / REVISIONS	Scale : NONE	Date : 11-04-2021	MS-204A3
	11-20-19 Added Solid Copper Note.			
	11-04-21 Added Main Breaker Note			

Single Phase Transformer Layout

Notes:

1. Line taps shall be made in the galvanized wiring trough by the electrical contractor.
2. Wire shall be sized to total name plate disconnect sizes.
3. Cooperative will complete wiring into transformer or UJB. Have an additional 10' of wire for termination.
4. All connections inside pad mounted transformer will be made by Bluebonnet.
5. Member/Electrician shall coordinate with Bluebonnet personal to install all conduit and the pulling of the secondary wire to the transformer. Member/Electrician shall notify Bluebonnet 48 hours in advance to schedule a time/date to perform the work.
6. If additional trips are made to the site by Bluebonnet personnel, applicable fees may be applied.
7. Maintain 3"–6" distance between the disconnect and the meter can. Member shall use a metal nipple. A straight or offset nipple is acceptable.
8. #6 solid, bare ground copper wire and clamp attached to Bluebonnet's pole ground.
9. See "Metering Guidelines" for other applicable notes.

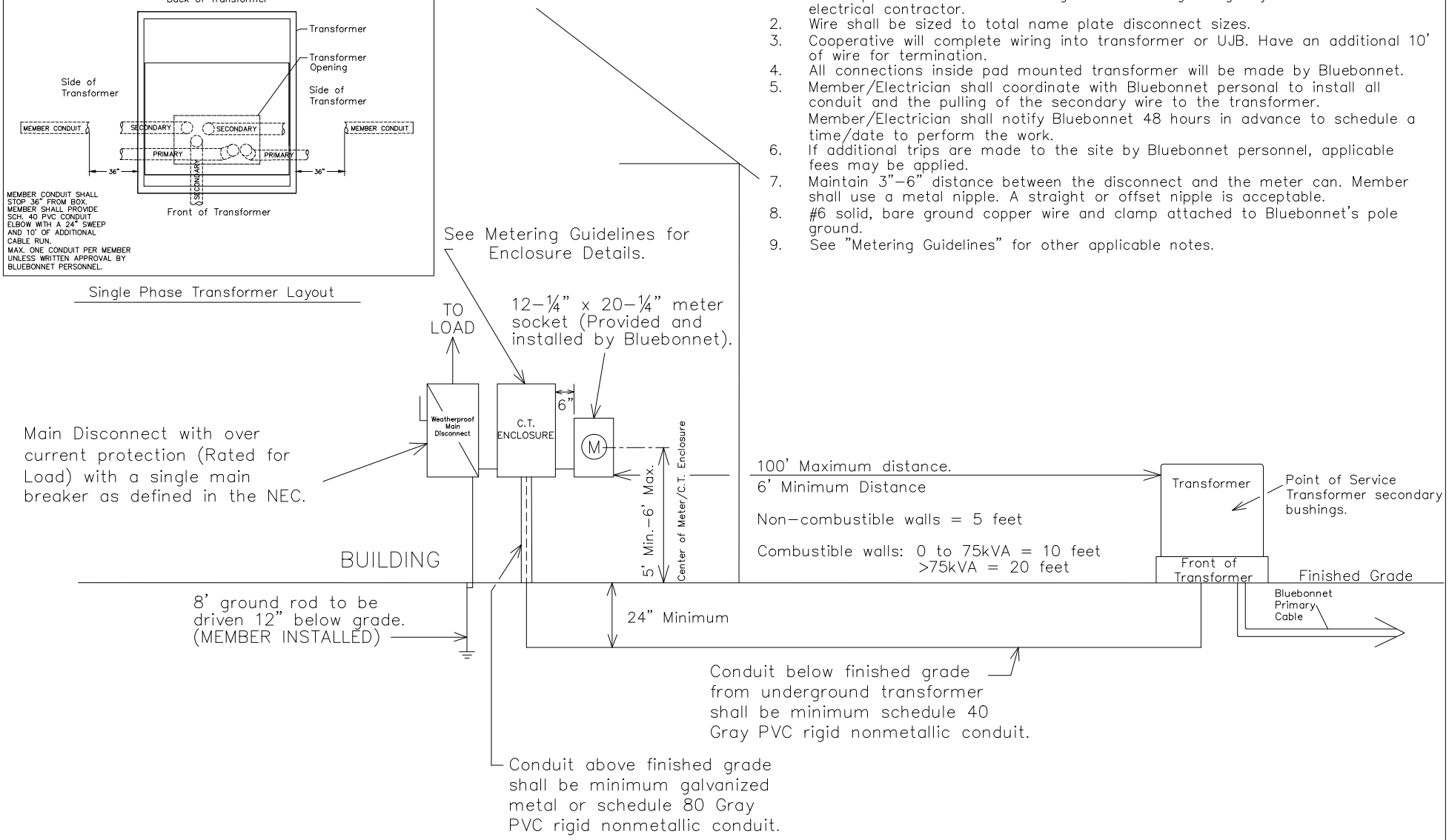

Bluebonnet	1 PHASE >400 AMP SERVICE WITH CT METERING ON BUILDING OR RACK	Drawn By : RG	Checked By : MS COMMITTEE	Approved By : MS COMMITTEE
	11–20–2017 Added Solid Copper Note.	Scale : NONE	Date : 11–04–2021	MS–204B1
	04–16–2021 Changed the size of the CT Meter Can requirements.			
	11–04–2021 Added Main Breaker Note			

Notes:

1. Line taps shall be made in the galvanized wiring trough by the electrical contractor.
2. Cooperative will complete wiring into transformer or UJB. Have an additional 10' of wire for termination.
3. All connections inside pad mounted transformer will be made by Bluebonnet.
4. Member/Electrician shall coordinate with Bluebonnet personal to install all conduit and the pulling of the secondary wire to the transformer. Member/Electrician shall notify Bluebonnet 48 hours in advance to schedule a time/date to perform the work.
5. If additional trips are made to the site by Bluebonnet personnel, applicable fees may be applied.
6. Maintain 3"–6" distance between the disconnect and the meter can. Member shall use a metal nipple. A straight or offset nipple is acceptable.
7. #6 solid, bare ground copper wire and clamp attached to Bluebonnet's pole ground.
8. See "Metering Guidelines" for other applicable notes.

Single Phase Transformer Layout

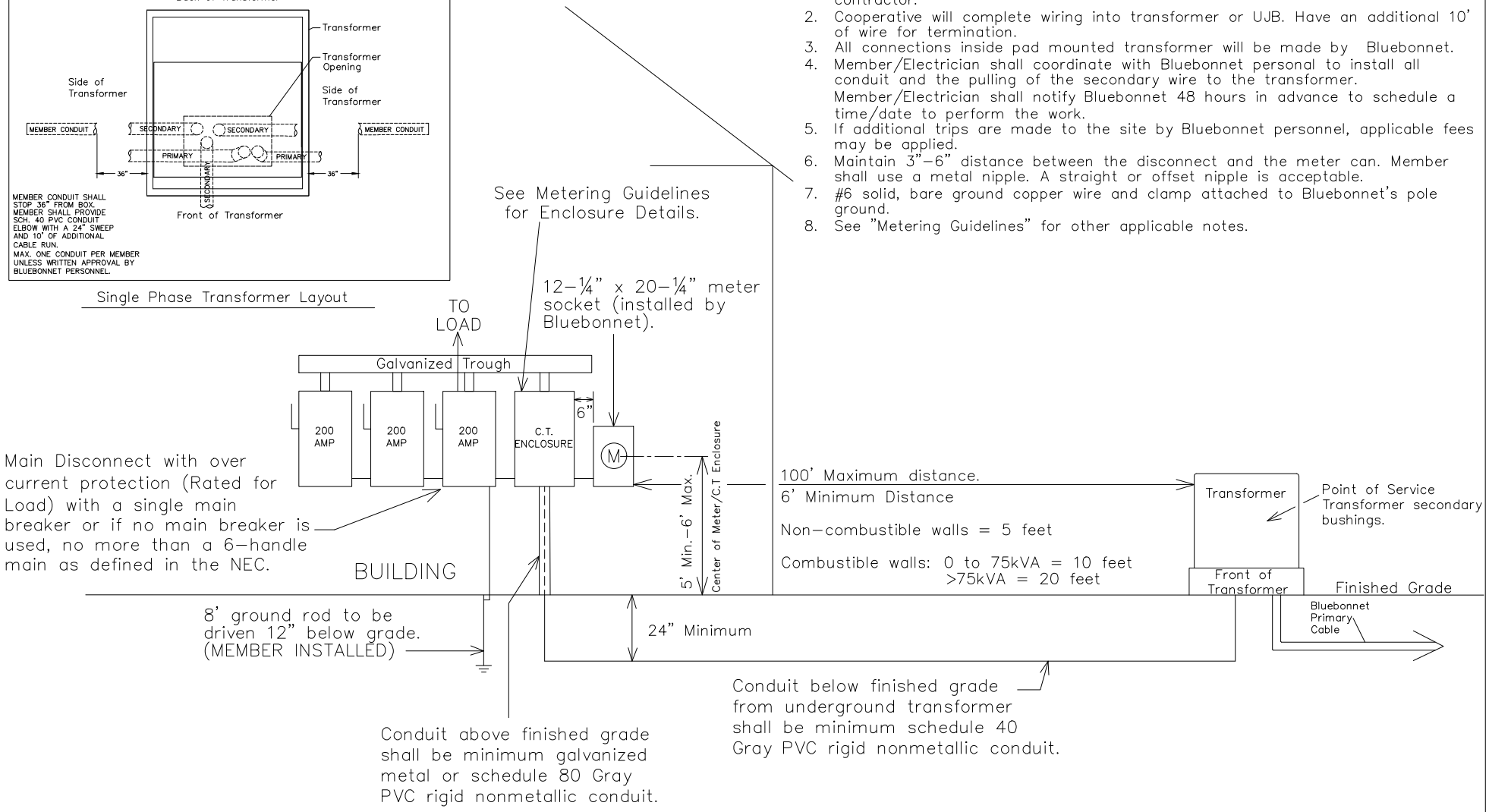

Bluebonnet	1 PHASE >400 AMP SERVICE WITH CT METERING ON BUILDING OR RACK	Drawn By : RG	Checked By : MS COMMITTEE	Approved By : TE
	01–30–2017 Changed the dimensions of the CT Enclosure.	Scale : NONE	Date : 01–30–2017	MS–204B2
	11–20–2017 Added Solid Copper Note.			

Notes:

1. Line taps shall be made in the galvanized wiring trough by the electrical contractor.
2. Cooperative will complete wiring into transformer or UJB. Have an additional 10' of wire for termination.
3. All connections inside pad mounted transformer will be made by Bluebonnet.
4. Member/Electrician shall coordinate with Bluebonnet personal to install all conduit and the pulling of the secondary wire to the transformer. Member/Electrician shall notify Bluebonnet 48 hours in advance to schedule a time/date to perform the work.
5. If additional trips are made to the site by Bluebonnet personnel, applicable fees may be applied.
6. Maintain 3"–6" distance between the disconnect and the meter can. Member shall use a metal nipple. A straight or offset nipple is acceptable.
7. See "Metering Guidelines" for other applicable notes.

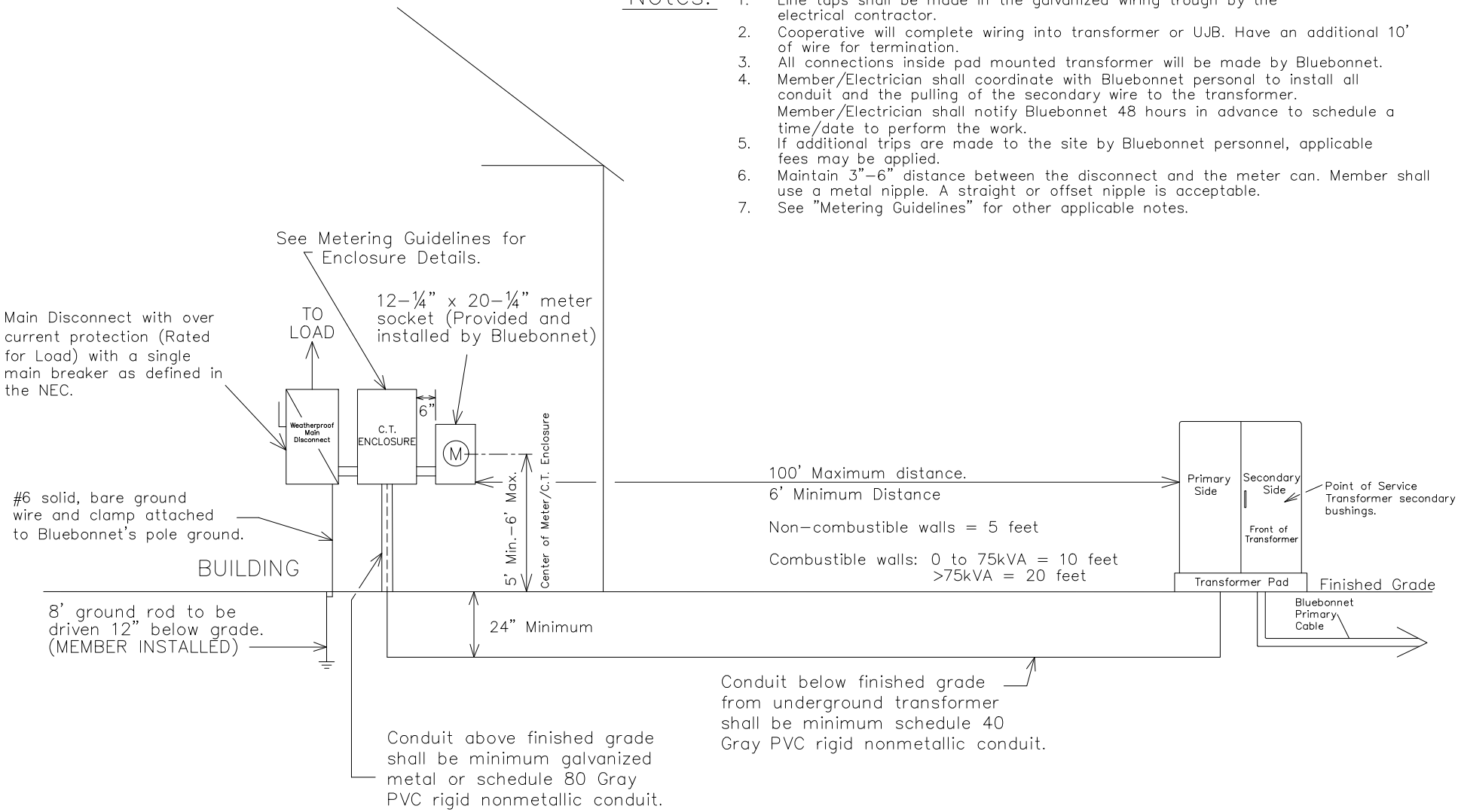

Bluebonnet	3 Phase >200 AMP SERVICE WITH CT METERING ON BUILDING OR RACK	Drawn By : RG	Checked By : MS COMMITTEE	Approved By : MS COMMITTEE
	11–20–2019 Added Solid Copper Note.	Scale : NONE	Date : 11–04–2021	MS–204B3
	04–19–2021 Removed Single Phase from the CT Enclosure Note.			
	11–04–2021 Added Main Breaker Note.			

Single Phase Transformer Layout

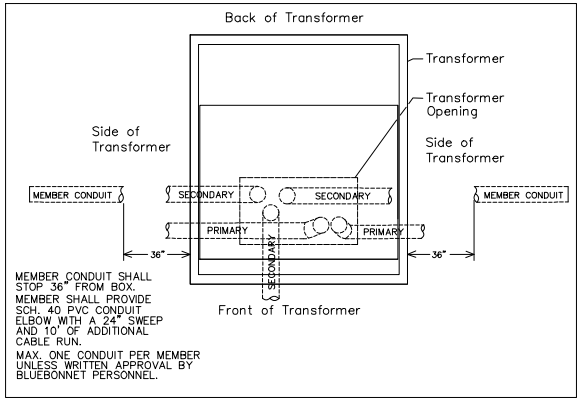

Notes:

1. Line taps shall be made in the galvanized trough by the electrical contractor.
2. More than (6) main disconnects require a properly sized main disconnect ahead of the galvanized trough.
3. Bluebonnet will complete wiring into transformer. Have 10' additional amount of wire for termination.
4. THREE PHASE APPLICATIONS ONLY DESCRIPTION: 200amp, 7 terminal, 3-phase, 4-wire will require a lever by-pass meeting ANSI C12.7, UL 414, and NEMA 3R. Meter cans are available for purchase through Techline or any other electrical supplier provided it meets all Bluebonnet Electric Cooperative specifications.
5. Member/Electrician shall coordinate with Bluebonnet personal to install all conduit and the pulling of the secondary wire to the transformer. Member/Electrician shall notify Bluebonnet 48 hours in advance to schedule a time/date to perform the work.
6. If additional trips are made to the site by Bluebonnet personnel, applicable fees maybe applied.
7. See "Metering Guidelines" for other applicable notes.

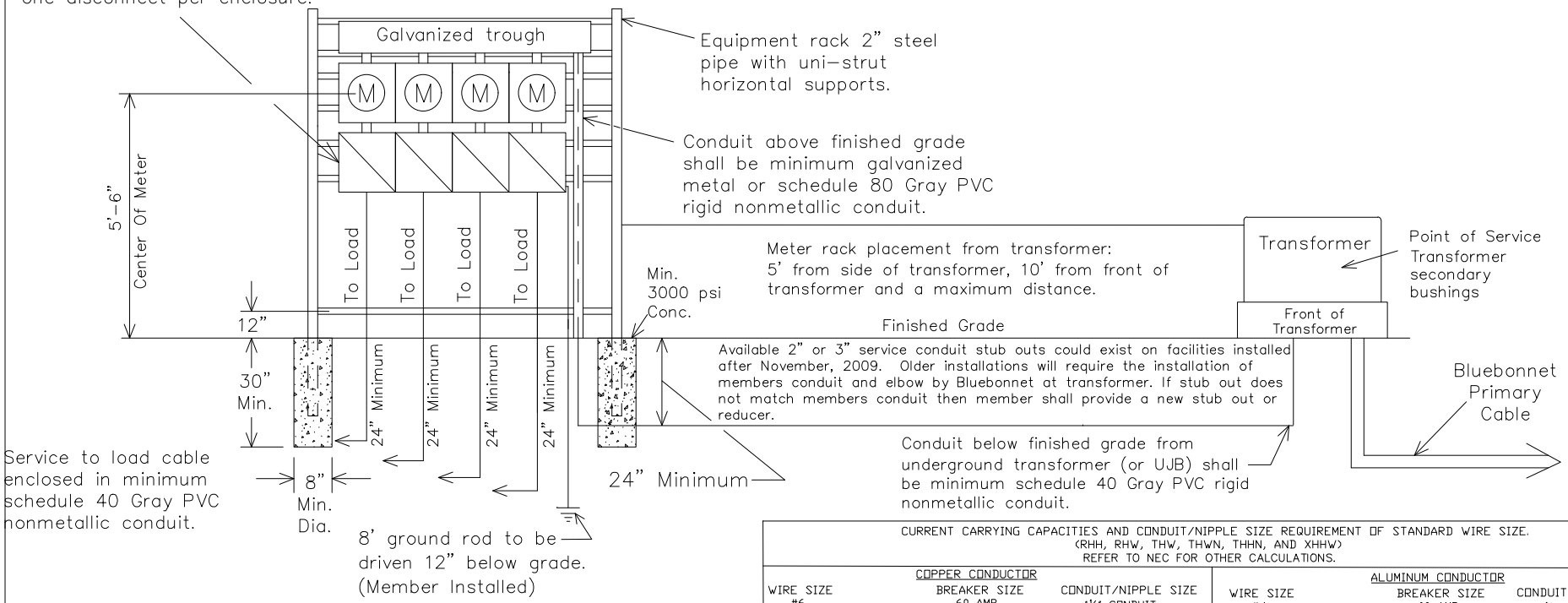

CURRENT CARRYING CAPACITIES AND CONDUIT/NIPPLE SIZE REQUIREMENT OF STANDARD WIRE SIZE.
(RHH, RHW, THW, THWN, THHN, AND XHHW)
REFER TO NEC FOR OTHER CALCULATIONS.

COPPER CONDUCTOR			ALUMINUM CONDUCTOR		
WIRE SIZE	BREAKER SIZE	CONDUIT/NIPPLE SIZE	WIRE SIZE	BREAKER SIZE	CONDUIT/NIPPLE SIZE
#6	60 AMP	1¼" CONDUIT	#4	60 AMP	1¼" CONDUIT
#4	100 AMP	1¼" CONDUIT	#2	100 AMP	1¼" CONDUIT
#2	125 AMP	1½" CONDUIT	#1/0	125 AMP	1½" CONDUIT
#1	150 AMP	2" CONDUIT	#2/0	150 AMP	2" CONDUIT
#2/0	200 AMP	2" CONDUIT	#4/0		

Bluebonnet

1Ø OR 3Ø, 60-200 AMP UNDERGROUND GANG MOUNTED METERS ON RACK OR BUILDING NOT TO EXCEED A TOTAL OF 800 AMPS.

DATE	REVISIONS
12-07-2017	ADDED WIRE SIZING CHART.
12-07-2017	ADDED MAIN BREAKER NOTE

Drawn By :	Checked By :	Approved By :
RG	MS COMMITTEE	MS COMMITTEE
Scale : NONE	Date : 11-04-2021	MS-205

CURRENT CARRYING CAPACITIES AND CONDUIT SIZE REQUIREMENT OF STANDARD WIRE SIZE (RH,RHH,RHW,THW,AND XHHW)					
COPPER CONDUCTOR			ALUMINUM CONDUCTOR		
WIRE SIZE	BREAKER SIZE	CONDUIT SIZE	WIRE SIZE	BREAKER SIZE	CONDUIT SIZE
#6	60 AMP	1¼" CONDUIT	#4	60 AMP	1¼" CONDUIT
#4	100 AMP	1¼" CONDUIT	#2	100 AMP	1¼" CONDUIT
#2	125 AMP	1½" CONDUIT	#1/0	125 AMP	1½" CONDUIT
#1	150 AMP	2" CONDUIT	#2/0	150 AMP	2" CONDUIT
#2/0	200 AMP	2" CONDUIT	#4/0	200 AMP	2" CONDUIT

Notes:
1. Cooperative will complete wiring between pedestal and transformer or UJB. Have sufficent amount of wire for termination.
2. Main disconnect supplied with pedestal. Repair or replacement of main disconnect after initial installation will be responsibility of member.
3. Meter pedestal must remain unenclosed and accessible by Bluebonnet personnel at all times.
4. Member/Developer – Do not stub out secondary conduit to house until pedestal is installed.
5. See "Metering Guidelines" for other applicable notes.

These meter pedestals are available for purchase through Techline.

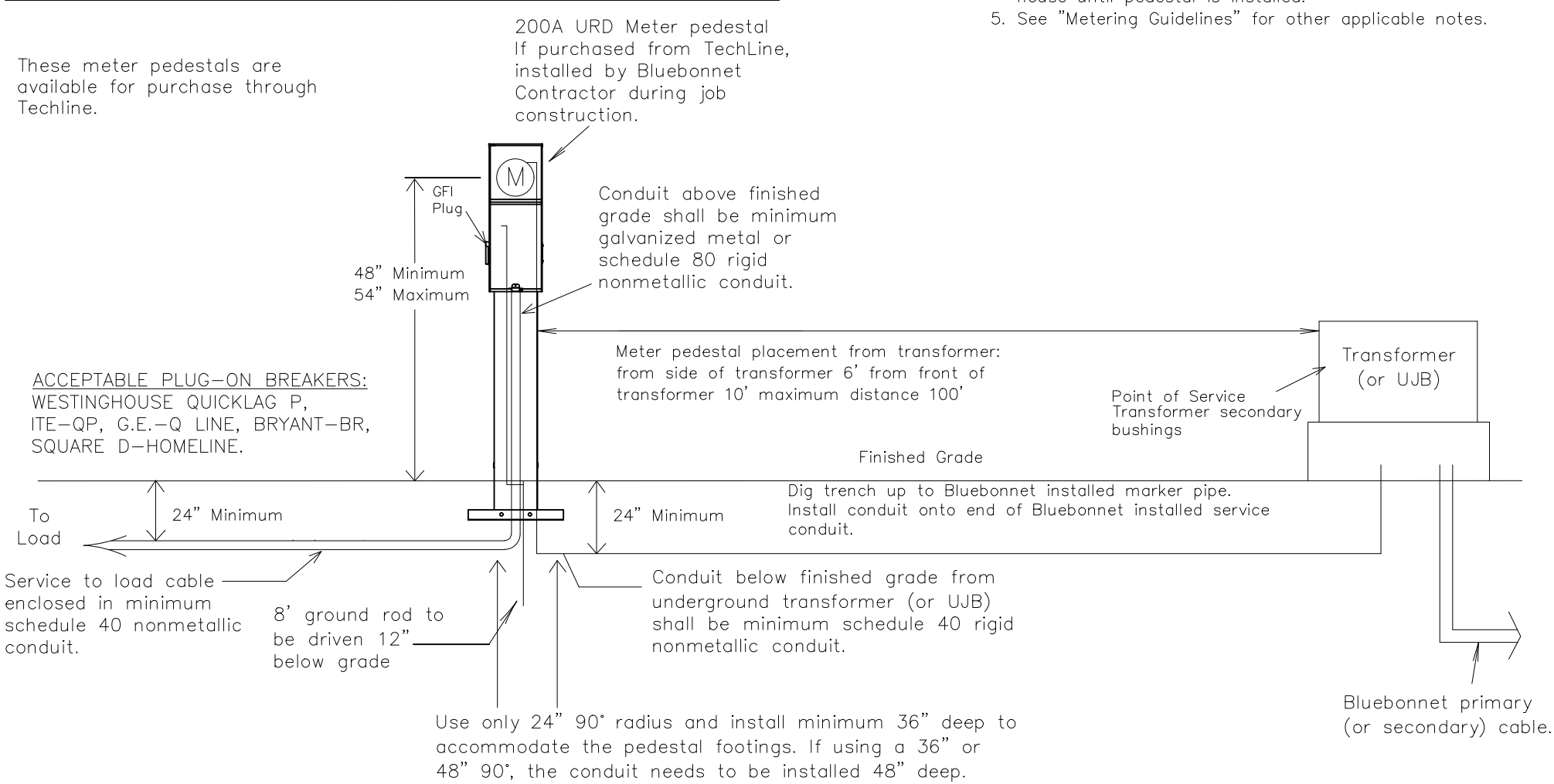

Bluebonnet	1Ø, 60-200 AMP URD SERVICE ON URD METER PEDESTAL	Drawn By : JB	Checked By : MS COMMITTEE	Approved By : TE
	DATE / REVISIONS	Scale : NONE	Date : 1-21-22	MS-206

Notes:

1. Covers on circuit breaker compartments must be removable without disturbing meters.
2. Meter socket components must be readily accessible and removable for maintenance.
3. Wire sized to total disconnect sizes.
4. Bluebonnet will complete wiring into transformer. Have sufficient amount of wire for termination.
5. If a main disconnect module is used, its cover must have provisions for a standard Bluebonnet padlock.
6. Member/Electrician shall coordinate with Bluebonnet personal to install all conduit and the pulling of the secondary wire to the transformer. Member/Electrician shall notify Bluebonnet 48 hours in advance to schedule a time/date to perform the work.
7. If additional trips are made to the site by Bluebonnet personnel, applicable fees maybe applied.
8. #6 Solid, Bare ground copper wire and clamp attached to Bluebonnet's pole ground.
9. No more than one disconnect per enclosure.
10. See "Metering Guidelines" for other applicable notes.

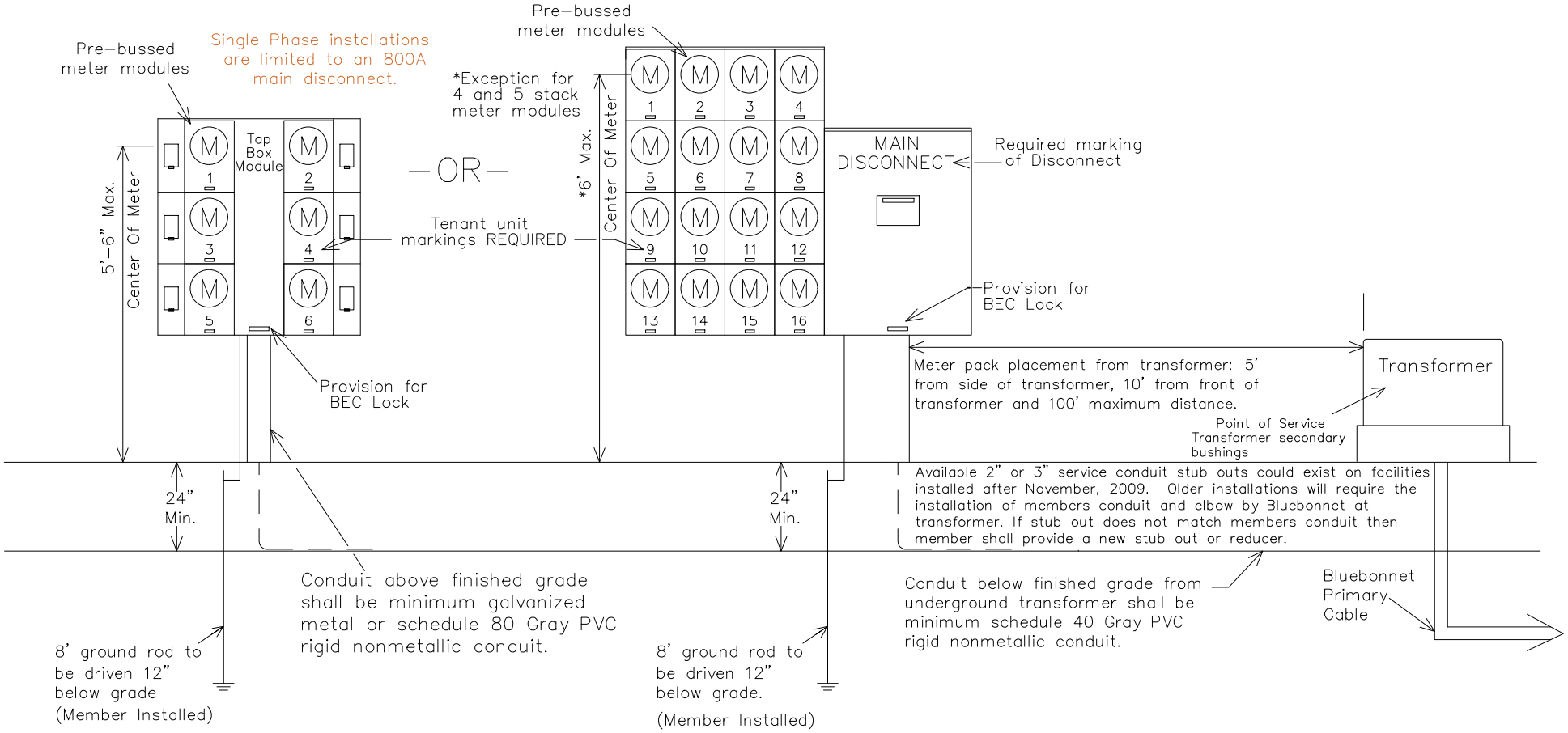

Bluebonnet	1Ø 60-200 AMP UNDERGROUND MULTI-PACK METERS ON BUILDING	Drawn By : BS	Checked By : MS COMMITTEE	Approved By : MS COMMITTEE
	DATE / REVISIONS	Scale : NONE	Date : 11-04-2021	MS-207
	11-20-19 Added Solid Copper Note.			
	11-04-21 Added Main Breaker Note.			

Notes:

1. Covers on circuit breaker compartments must be removable without disturbing meters.
2. Meter socket components must be readily accessible and removable for maintenance.
3. Wire sized to total disconnect sizes.
4. Bluebonnet will complete wiring into transformer. Have sufficient amount of wire for termination.
5. If a main disconnect module is used, its cover must have provisions for a standard Bluebonnet padlock.
6. Member/Electrician shall coordinate with Bluebonnet personal to install all conduit and the pulling of the secondary wire to the transformer. Member/Electrician shall notify Bluebonnet 48 hours in advance to schedule a time/date to perform the work.
7. If additional trips are made to the site by Bluebonnet personnel, applicable fees maybe applied.
8. #6 solid, bare ground copper wire and clamp attached to Bluebonnet's pole ground.
9. No more than one disconnect per enclosure.
10. See "Metering Guidelines" for other applicable notes.

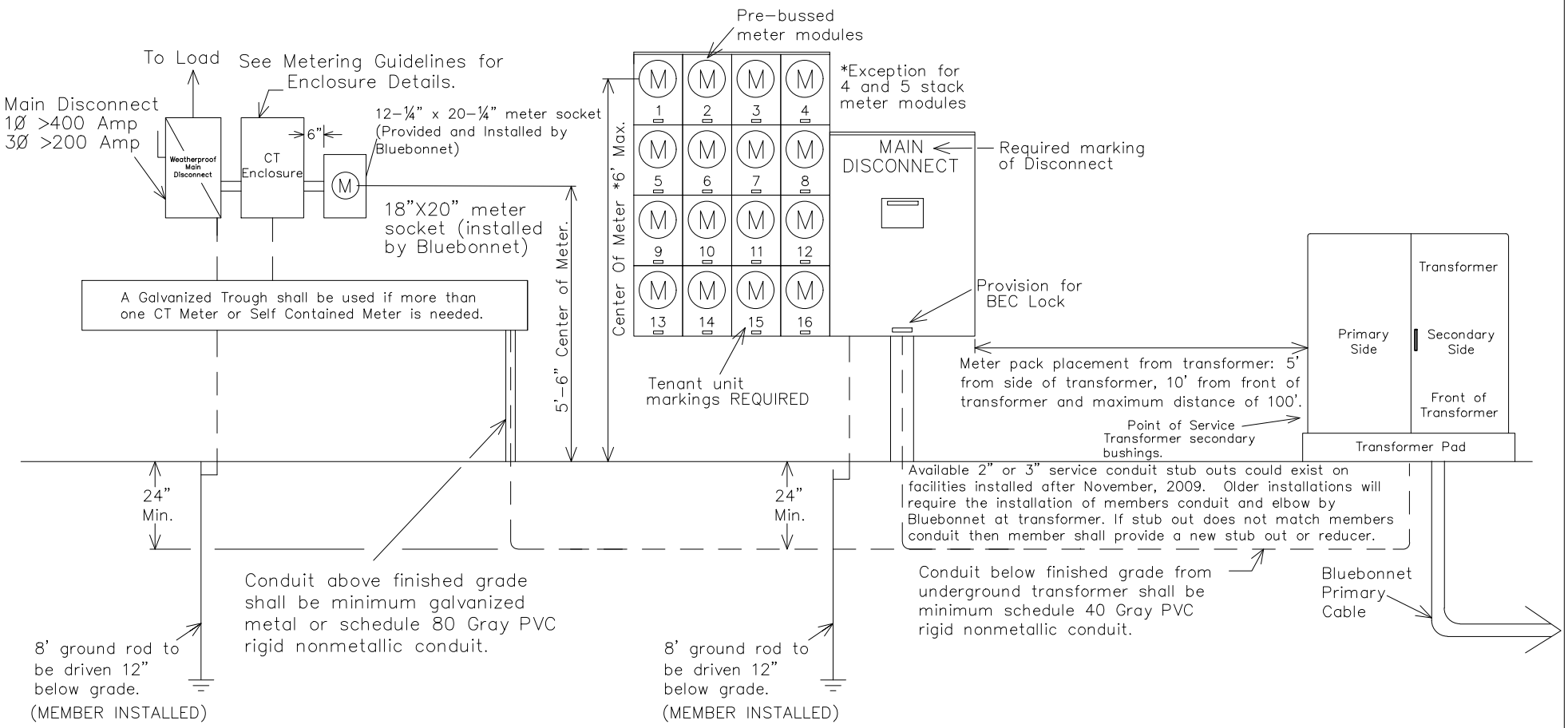

Bluebonnet	3Ø 60-200 AMP UNDERGROUND MULTI-PACK METERS & 3Ø < or >200 AMP ON BUILDING	Drawn By : RG	Checked By : MS COMMITTEE	Approved By : MS COMMITTEE
	DATE / REVISIONS	Scale : NONE	Date : 11-04-2021	MS-207B
	11-20-2019 Added Solid Copper Note.			
	11-04-2021 Added Main Breaker Note.			

Notes:

1. A Bond wire shall be used, see NEC Table 250.66 for Bond Wire sizing.
2. Height of meter loop riser will be determined by BEC.
3. Grounded leg shall be identified and shall be landed in the center of the meter can.
4. See "Metering Guidelines" for all other applicable notes.

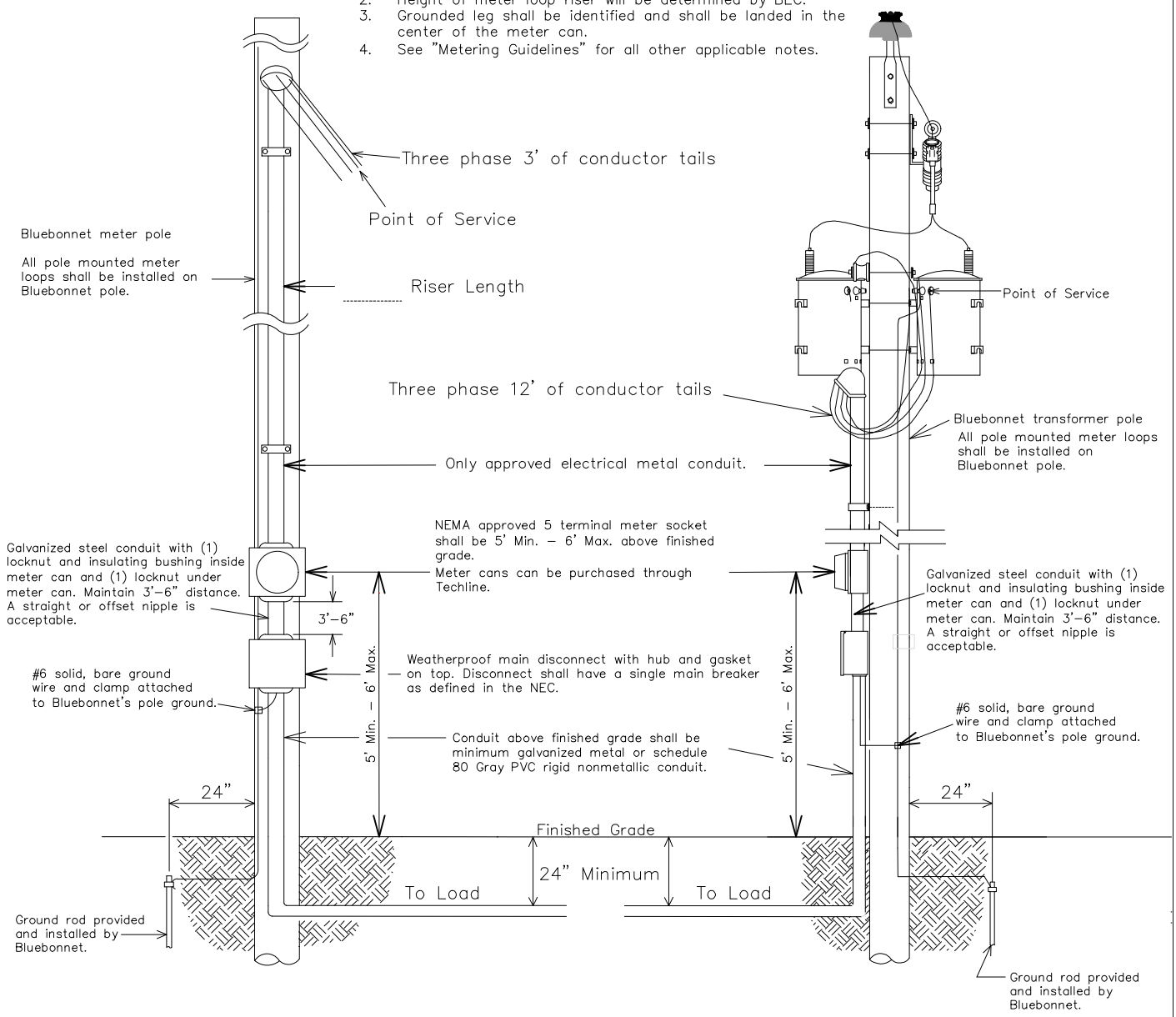

CURRENT CARRYING CAPACITIES AND CONDUIT SIZE REQUIREMENT OF STANDARD WIRE SIZE–(RHH, RHW, THW, THWN, THHN, AND XHHW REFER TO NEC FOR OTHER CALCULATIONS.

COPPER CONDUCTOR

WIRE SIZE	BREAKER SIZE	CONDUIT SIZE
#6	60 AMP	1¼" CONDUIT
#4	100 AMP	1¼" CONDUIT
#2	125 AMP	1½" CONDUIT
#1	150 AMP	2" CONDUIT
#2/0	200 AMP	2" CONDUIT

ALUMINUM CONDUCTOR

WIRE SIZE	BREAKER SIZE	CONDUIT SIZE
#4	60 AMP	1¼" CONDUIT
#2	100 AMP	1¼" CONDUIT
#1/0	125 AMP	1½" CONDUIT
#2/0	150 AMP	2" CONDUIT
#4/0	200 AMP	2" CONDUIT

3Ø, STRAIGHT 480 VOLT 3W CORNER GROUND DELTA 60–200 AMP

Bluebonnet

DATE	REVISIONS
12–07–2017	Changed the wording on Note # 6.
11–04–2021	Added Main Breaker Note

Drawn By :	Checked By :	Approved By :
RG	MS COMMITTEE	MS COMMITTEE
Scale : NONE	Date: 11–04–2021	MS–301A

Notes:

1. A Bond wire shall be used, see NEC Table 250.66 for Bond Wire sizing.
2. Height of meter loop riser will be determined by BEC.
3. High leg on a Delta System shall be landed on the right side of the meter can and tapped with orange tap.
4. See "Metering Guidelines" for all other applicable notes.

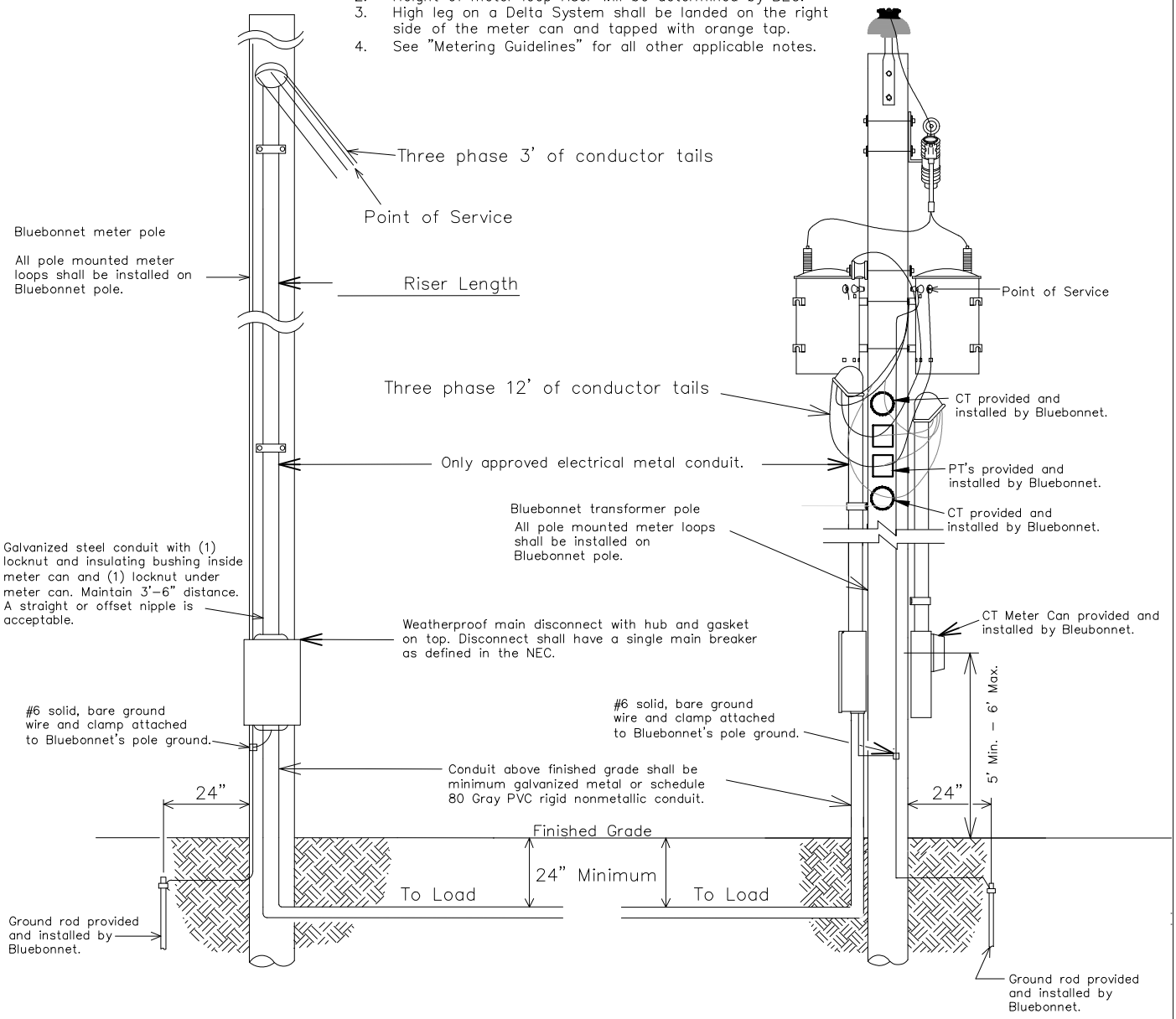

CURRENT CARRYING CAPACITIES AND CONDUIT SIZE REQUIREMENT OF STANDARD WIRE SIZE-(RHH, RHW, THW, THWN, THHN, AND XHHW REFER TO NEC FOR OTHER CALCULATIONS.

COPPER CONDUCTOR

WIRE SIZE	BREAKER SIZE	CONDUIT SIZE
#6	60 AMP	1¼" CONDUIT
#4	100 AMP	1¼" CONDUIT
#2	125 AMP	1½" CONDUIT
#1	150 AMP	2" CONDUIT
#2/0	200 AMP	2" CONDUIT

ALUMINUM CONDUCTOR

WIRE SIZE	BREAKER SIZE	CONDUIT SIZE
#4	60 AMP	1¼" CONDUIT
#2	100 AMP	1¼" CONDUIT
#1/0	125 AMP	1½" CONDUIT
#2/0	150 AMP	2" CONDUIT
#4/0	200 AMP	2" CONDUIT

3 PHASE, STRAIGHT 480 VOLT 3W CORNER GROUND DELTA >200 AMP

Bluebonnet

DATE	REVISIONS
11-04-21	Added Main Breaker Note
-	-

Drawn By :	Checked By :	Approved By :
RG	MS COMMITTEE	MS COMMITTEE
Scale : NONE	Date: 11-04-2021	MS-301B

Notes:

1. Line taps shall be made in the galvanized wire trough by the electrical contractor.
2. When more than (1) disconnect is used, a galvanized rough system shall be installed.
3. Two (2) disconnects could be substituted with (1) disconnect. All disconnects shall have over current protection installed.
4. No more than two (2) risers or two (2) conductors per phase shall be allowed.
5. Maintain 3"–6" distance between the disconnect and the meter can. Member shall use a metal nipple. A straight or offset nipple is acceptable.
6. #6 solid, bare ground copper wire and clamp attached to Bluebonnet's pole ground.
7. High leg on a Delta System shall be landed on the right side of the meter can and taped with orange tape.
8. See "Metering Guidelines" for all other applicable notes.

Ⓐ
Transformer Pole Riser Length:
35' Pole = 20' Riser
40' Pole = 24' Riser

Ⓑ
Service Pole Riser Length:
30' Pole = 20' Riser
35' Pole = 24' Riser

Ⓒ
Member's Conduit
Member's conduit shall be installed 8"–12" from pole

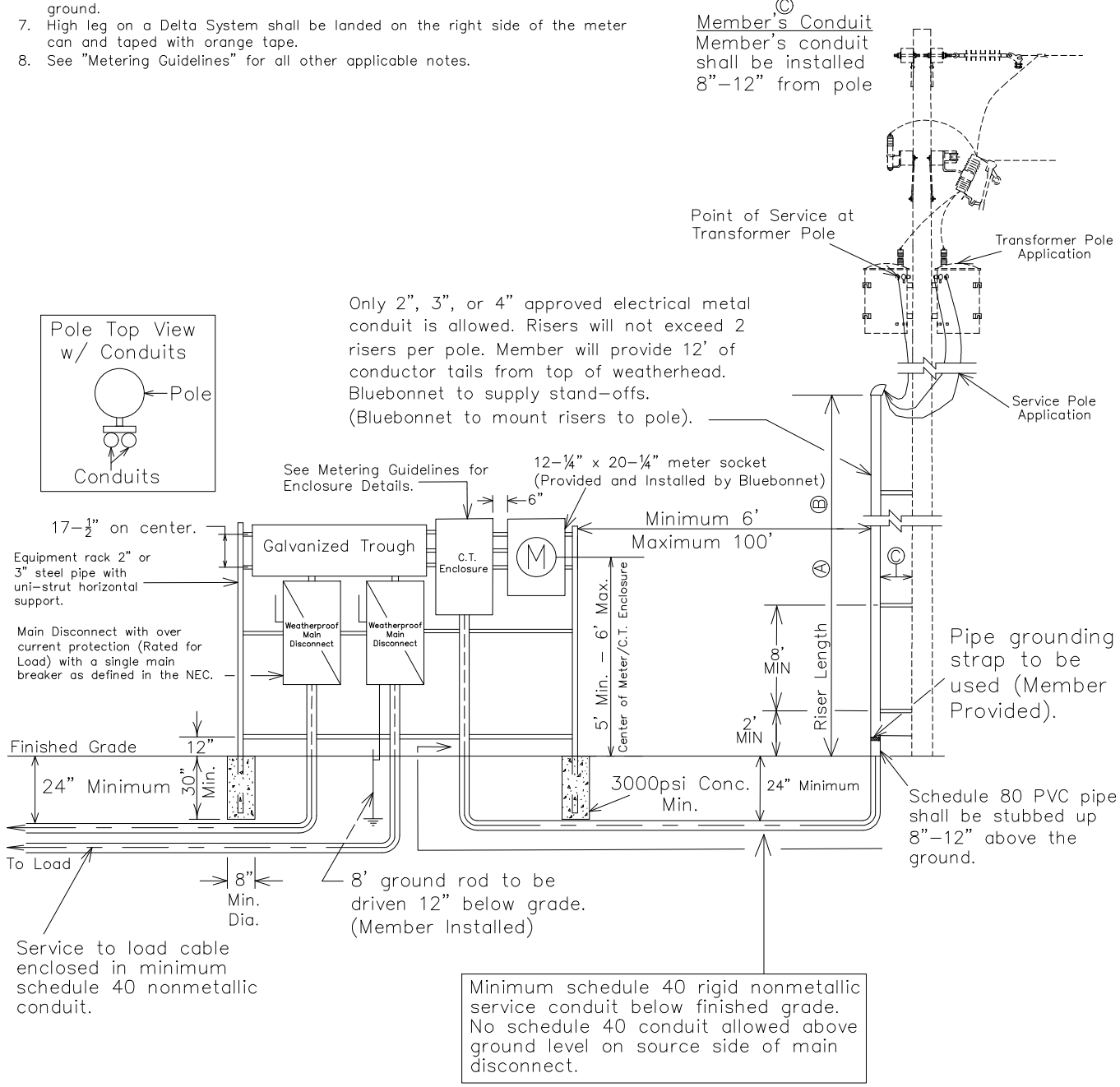

3PH, STRAIGHT 480 VOLT 3W CORNER GROUND DELTA >200 AMP ON RACK OR BUILDING

Bluebonnet

Drawn By : DK	Checked By : CV	Approved By : STANDARDS
Scale : NONE	DATE: Jun. 27, 2023	MS–301C

Notes:

1. All temporary wiring shall meet national electrical code standards.
2. All outlets attached to meter loop shall have ground–fault circuit interrupter protection.
3. For all URD jobs, electricians shall call TEXAS811 for locates before digging to Bluebonnet equipment. No private utilities will be located
4. Service wires shall be brought to the top side of the meter base.
5. Bluebonnet does inspect temporary meter loops and a fee shall be charged per trip for wiring inspection. Bluebonnet will refuse service if hazardous conditions exist and/or if connections do not meet specifications.
6. Bluebonnet will complete wiring into transformer or UJB. Member shall have sufficent amount of wire for termination.
7. All connections inside pad mounted transformer and UJB's will be made by Bluebonnet.
8. Temporary Meter Loop Services are good for up to 24 months of service or less.
9. The main electrical disconnect for each electrical service shall be installed on the exterior of the building in a location approved by Bluebonnet Electric Cooperative.

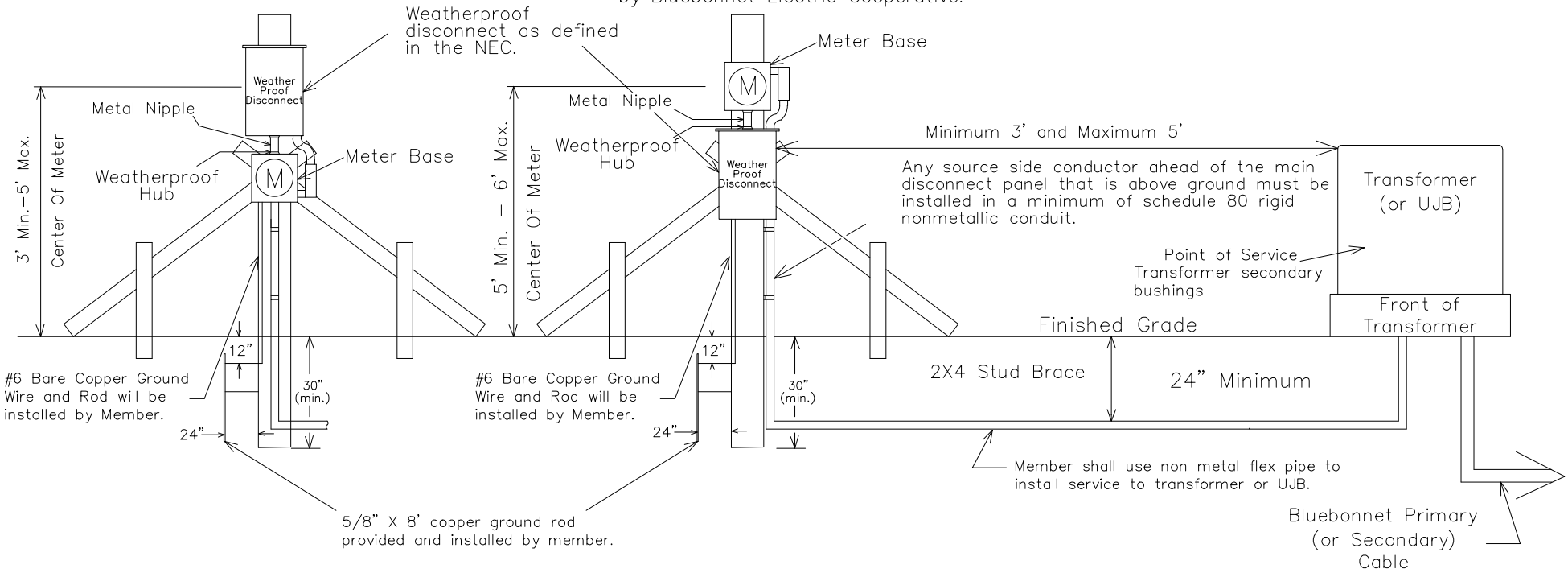

CURRENT CARRYING CAPACITIES AND CONDUIT/NIPPLE SIZE REQUIREMENT OF STANDARD WIRE SIZE (RHH, RHW, THW, THWN, THHN, AND XHHW)
REFER TO NEC FOR OTHER CALCULATIONS.

COPPER CONDUCTOR			ALUMINUM CONDUCTOR		
WIRE SIZE	BREAKER SIZE	CONDUIT SIZE	WIRE SIZE	BREAKER SIZE	CONDUIT SIZE
#6	60 AMP	1¼" CONDUIT	#4	60 AMP	1¼" CONDUIT
#4	100 AMP	1¼" CONDUIT	#2	100 AMP	1¼" CONDUIT
#2	125 AMP	1½" CONDUIT	#1/0	125 AMP	1½" CONDUIT
#1	150 AMP	2" CONDUIT	#2/0	150 AMP	2" CONDUIT
#2/0	200 AMP	2" CONDUIT	#4/0	200 AMP	2" CONDUIT

Bluebonnet

TEMPORARY METER LOOP FOR UNDERGROUND SERVICE

DATE	REVISIONS
03–29–2018	ADDED ADDITIONAL METER SETUP.
11–04–2021	ADDED MAIN BREAKER NOTE

Drawn By :	Checked By :	Approved By :
RG	MS COMMITTEE	MS COMMITTEE
Scale : NONE	DATE: 11–04–2021	MS–302

Notes:

1. All pole mounted meter loops shall be mounted to Bluebonnet poles.
2. All secondary connections made by Bluebonnet.
3. All outlets attached to meter loop shall have ground–fault circuit interrupter protection.
4. Temporary Meter Loop Services are good for 24 months of service or less
5. For your safety, only Bluebonnet personnel are authorized to install meter loops or other BEC equipment on a Bluebonnet pole. Members shall have loop assembled and available for installation by Bluebonnet.

Bluebonnet does inspect temporary meter loops and a fee shall be charged per trip for wiring inspections. Bluebonnet will deny service if hazardous conditions do not meet specifications.

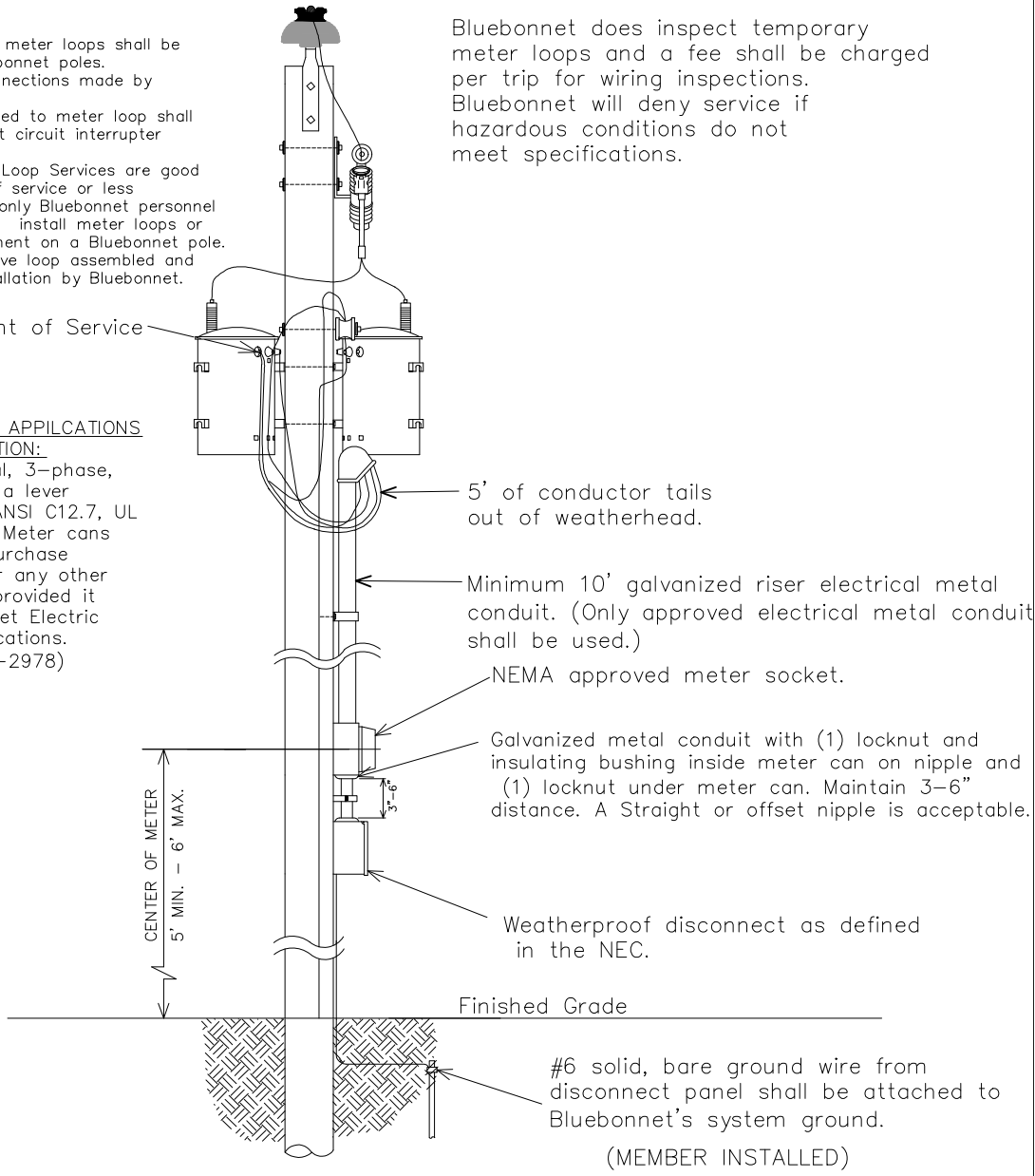

FOR THREE PHASE APPILCATIONS
DESCRIPTION:
200amp, 7 terminal, 3–phase, 4–wire will require a lever by–pass meeting ANSI C12.7, UL 414, an NEMA 3R. Meter cans are available for purchase through Techline or any other electrical supplier provided it meets all Bluebonnet Electric Cooperative specifications. Techline (512–332–2978)

CURRENT CARRYING CAPACITIES AND CONDUIT SIZE REQUIREMENT OF STANDARD WIRE SIZE – (RHH, RHW, THW, THWN, THHN, AND XHHW
REFER TO NEC FOR OTHER CALCULATIONS.

COPPER CONDUCTOR

Wire Size	Breaker Size	Conduit Size
#6	60 Amp	1¼" Conduit
#4	100 Amp	1¼" Conduit
#2	125 Amp	1½" Conduit
#1	150 Amp	2" Conduit
#2/0	200 Amp	2" Conduit

ALUMINUM CONDUCTOR

Wire Size	Breaker Size	Conduit Size
#4	60 Amp	1¼" Conduit
#2	100 Amp	1¼" Conduit
#1/0	125 Amp	1½" Conduit
#2/0	150 Amp	2" Conduit
#4/0	200 Amp	2" Conduit

1Ø OR 3Ø 60–200 AMP TEMPORARY METER LOOP FOR TRANSFORMER AND SERVICE POLES

DATE	REVISIONS
03–31–20	Added note 5.
11–04–21	Added main breaker note

Bluebonnet

Drawn By :	Checked By :	Approved By :
RG	MS COMMITTEE	MS COMMITTEE
Scale : NONE	DATE: 11–04–2021	MS–303